User's Manual

Model SR770
FFT Network Analyzer

Stanford Research Systems

1290-D Reamwood Avenue
Sunnyvale, California 94089
Phone: (408) 744-9040 • Fax: (408) 744-9049
email: info@thinkSRS.com • www.thinkSRS.com

Copyright © 1992, 1993, 2020, 2022, 2024 by SRS, Inc.
All Rights Reserved.

Revision 2.2 (05/2024)

TABLE OF CONTENTS

GENERAL INFORMATION
- Safety and Preparation for Use iii
- Specifications v
- Abridged Command List1-9 viii

GETTING STARTED
- Your First Measurement 1-1
- Analyzing a Sine Wave 1-2
- Second Measurement Example 1-6
- Amplifier Noise Level 1-7
- Using Triggers and the Time Record 1-10
- Using the Disk Drive 1-14
- Using Data Tables 1-20
- Using Limit Tables 1-23
- Using Trace Math 1-27
- Using the Source 1-31
  - Sine 1-32
  - Two Tone 1-36
  - Noise 1-38
  - Chirp 1-41

Things to Watch Out For 1-46

ANALYZER BASICS
- What is an FFT Spectrum Analyzer? 2-1
- Frequency Spans 2-2
- The Time Record 2-3
- Measurement Basics 2-4
- Display Type 2-5
- Windowing 2-6
- Averaging 2-7
- Real Time Bandwidth and Overlap 2-8
- Input Range 2-9
- The Source 2-10

OPERATION

Front Panel 3-1
- Power On/Off 3-1
- Reset 3-1
- Video Display 3-1
- Soft Keys 3-2
- Keypad 3-2
- Spin Knob 3-2
- Disk Drive 3-2
- BNC Connectors 3-2

Screen Display 3-3
- Data Display 3-3
- Single/Dual Trace Displays 3-3
- Marker Display 3-5
- Menu Display 3-5
- Status Indicators 3-5

Keypad 3-7
- Normal and Alternate Keys 3-7
- Menu Keys 3-7
- Entry Keys 3-8
- START and PAUSE/CONT 3-8
- MARKER 3-9
- ACTIVE TRACE 3-9
- AUTO RANGE 3-9
- AUTOSCALE 3-9
- SPAN UP/DOWN 3-9
- MARKER ENTRY 3-9
- MARKER MODE 3-9
- MARKER REF 3-9
- MARKER CENTER 3-9
- MARKER MAX/MIN 3-10
- PRINT 3-10
- HELP 3-10
- LOCAL 3-10

Rear Panel 3-11
- Power Entry Module 3-11
- IEEE-488 Connector 3-11
- RS232 Connector 3-11
- Parallel Printer Connector 3-11
- PC Keyboard Connector 3-11

MENUS
- Frequency Menu 4-1
- Measure Menu 4-3
- Display Menu 4-15
- Marker Mode Menu 4-17
- Input Menu 4-19
- Scale Menu 4-25
- Analyze Menu 4-27
- Average Menu 4-43
- Source Menu 4-47
- System Menu 4-55
- Store/Recall Menu 4-71
- Default Settings 4-79

PROGRAMMING
- GPIB Communications 5-1
- RS232 Communications 5-1
- Status Indicators and Queues 5-1
- Command Syntax 5-1
- Interface Ready and Status 5-2

Detailed Command List 5-3
- Frequency Commands 5-4
- Measurement Commands 5-5
- Display and Marker Commands 5-6
- Scale Commands 5-8
- Input Commands 5-9
- Analysis Commands 5-10
- Data Table Commands 5-11
- Limit Table Commands 5-12
- Averaging Commands 5-13
- Source Commands 5-14
- Print and Plot Commands 5-15
- System Setup Commands 5-16
- Store and Recall Commands 5-18

TABLE OF CONTENTS

Trace Math Commands 5-19
Front Panel Control Commands 5-20
Data Transfer Commands 5-21
Interface Commands 5-23
Status Reporting Commands 5-24

Status Byte Definitions 5-25
Serial Poll Status Byte 5-25
Serial Polls 5-25
Service Requests (SRQ) 5-26
Standard Event Status Byte 5-26
FFT Status Byte 5-27
Error Status Byte 5-27

Program Examples
Microsoft C, Nat'l Instruments GPIB 5-28
BASIC, Nat'l Instruments GPIB 5-31

TESTING
Introduction 6-1
Preset 6-1
Serial Number 6-1
Firmware Revision 6-1
General Installation 6-1
Necessary Equipment 6-3
If A Test Fails 6-3

Performance Tests
Self Tests 6-4
DC Offset 6-5
Common Mode Rejection 6-7
Amplitude Accuracy and Flatness 6-8
Amplitude Linearity 6-11
Anti-Alias Filter Attenuation 6-13
Frequency Accuracy 6-14
Phase Accuracy 6-15
Harmonic Distortion 6-17
Noise and Spurious Signals 6-19
Sine Source 6-21

Performance Test Record 6-23

CIRCUIT DESCRIPTION
Circuit Boards 7-1
Video Driver and CRT 7-1

CPU Board
Microprocessor System 7-2
Keypad Interface 7-2
Keyboard Interface 7-2
Spin Knob 7-3
Speaker 7-4
Clock/Calendar 7-4
Printer Interface 7-4
Video Graphics Interface 7-4
Disk Controller 7-4
GPIB Interface 7-4
RS232 Interface 7-4
Expansion Connector 7-4

Power Supply Board
Unregulated Power Supplies 7-4
Power Supply Regulators 7-4

DSP Logic Board
Overview 7-5
DSP Processors 7-5
Trigger 7-5
Timing Generator 7-6
I/O Interface 7-6
Source 7-6

Analog Input Board
Overview 7-7
Input Amplifier 7-7
Gain Stages and Attenuators 7-7
Anti-Alias Filter 7-7
A/D Converter 7-8
I/O Interface 7-8
Power 7-8

Parts Lists
CPU Board 7-9
Power Supply Board 7-13
DSP Logic Board 7-16
Analog Input Board 7-20
Chassis Assembly 7-28
Miscellaneous 7-30

Schematic Diagrams
CPU Board
Power Supply Board
DSP Logic Board
Analog Input Board

SAFETY AND PREPARATION FOR USE

WARNING

Dangerous voltages, capable of causing injury or death, are present in this instrument. Use extreme caution whenever the instrument covers are removed. Do not remove the covers while the unit is plugged into a live outlet.

CAUTION

This instrument may be damaged if operated with the LINE VOLTAGE SELECTOR set for the wrong AC line voltage or if the wrong fuse is installed.

LINE VOLTAGE SELECTION

The SR770 operates from a 100V, 120V, 220V, or 240V nominal AC power source having a line frequency of 50 or 60 Hz. Before connecting the power cord to a power source, verify that the LINE VOLTAGE SELECTOR card, located in the rear panel fuse holder, is set so that the correct AC input voltage value is visible.

Conversion to other AC input voltages requires a change in the fuse holder voltage card position and fuse value. Disconnect the power cord, open the fuse holder cover door and rotate the fuse-pull lever to remove the fuse. Remove the small printed circuit board and select the operating voltage by orienting the printed circuit board so that the desired voltage is visible when pushed firmly into its slot. Rotate the fuse-pull lever back into its normal position and insert the correct fuse into the fuse holder.

LINE FUSE

Verify that the correct line fuse is installed before connecting the line cord. For 100V/120V, use a 1 Amp fuse and for 220V/240V, use a 1/2 Amp fuse.

LINE CORD

The SR770 has a detachable, three-wire power cord for connection to the power source and to a protective ground. The exposed metal parts of the instrument are connected to the outlet ground to protect against electrical shock. Always use an outlet which has a properly connected protective ground.

SERVICE

Do not attempt to service or adjust this instrument unless another person, capable of providing first aid or resuscitation, is present.

Do not install substitute parts or perform any unauthorized modifications to this instrument. Contact the factory for instructions on how to return the instrument for authorized service and adjustment.

Symbols you may find on SRS products.

Symbol	Description
	Alternating current
	Caution - risk of electric shock
	Frame or chassis terminal
	Caution - refer to accompanying documents
	Earth (ground) terminal
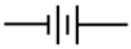	Battery
	Fuse
	On (supply)
	Off (supply)

SPECIFICATIONS

FREQUENCY

Measurement Range	476 μHz to 100 kHz, baseband and zoomed.
Spans	191 mHz to 100 kHz in a binary sequence.
Center Frequency	Anywhere within the measurement range subject to span and range limits.
Accuracy	25 ppm from 20°C to 40°C.
Resolution	Span/400
Window Functions	Blackman-Harris, Hanning, Flattop and Uniform.
Real-time Bandwidth	100 kHz

SIGNAL INPUT

Number of Channels	1
Input	Single-ended or true differential
Input Impedance	1 MΩ, 15 pf
Coupling	AC or DC
CMRR	90 dB at 1 kHz (Input Range < -6 dBV) 80 dB at 1 kHz (Input Range <14 dBV) 50 dB at 1 kHz (Input Range ≥ 14 dBV)
Noise	5 nVrms/√Hz at 1 kHz typical, 10 nVrms/√Hz max. (-162 dBVrms/√Hz typ., -155 dBVrms/√Hz max.)

AMPLITUDE

Full Scale Input Range	-60 dBV (1.0 mVpk) to +34 dBV (50 Vpk) in 2 dB steps.
Dynamic Range	90 dB typical
Harmonic Distortion	No greater than -80 dB from DC to 100 kHz. (Input Range ≤ 0 dBV)
Spurious	Input range ≥ -50 dBV: No greater than -85 dB below full scale below 200 Hz. No greater than -90 dB below full scale to 100 kHz.
Input Sampling	16 bit A/D at 256 kHz
Accuracy	± 0.3 dB ± 0.02% of full scale (excluding windowing effects).
Averaging	RMS, Vector and Peak Hold. Linear and exponential averaging up to 64k scans.

TRIGGER INPUT

Modes	Continuous, internal, external, or external TTL.
Internal	Level: Adjustable to ±100% of input scale. Positive or Negative slope. Minimum Trigger Amplitude: 10% of input range.
External	Level: ±5V in 40 mV steps. Positive or Negative slope. Impedance: 10 kΩ Minimum Trigger Amplitude: 100 mV.
External TTL	Requires TTL level to trigger (low<.7V, high>2V).
Post-Trigger	Measurement record is delayed by 1 to 65,000 samples (1/512 to 127 time records) after the trigger. Delay resolution is 1 sample (1/512 of a record).
Pre-Trigger	Measurement record starts up to 51.953 ms prior to the trigger. Delay resolution is 3.9062 μs.
Phase Indeterminacy	<2°

DISPLAY FUNCTIONS

Display	Real, imaginary, magnitude or phase spectrum.
Measurements	Spectrum, power spectral density, time record and 1/3 octave.
Analysis	Band, sideband, total harmonic distortion and trace math.
Trace Math	Add, subtract, multiply, and divide with a constant, ω (2πf), or another trace. Log (base 10), square root, phase unwrap and d/dx functions.
Graphic Expand	Display expands up to 50x about any point in the display.

MARKER FUNCTIONS

Harmonic Marker	Displays up to 400 harmonics of the fundamental.
Delta Marker	Reads amplitude and frequency relative to defined reference.
Next Peak/Harmonic	Locates nearest peak or harmonic to the left or right.
Data Tables	Lists Y values of up to 200 user defined X points.
Limit Tables	Automatically detects data exceeding up to 100 user defined upper and lower limit trace segments.

SOURCE OUTPUT

Amplitude Range	0.1 mVpk to 1.000 Vpk
Amplitude Resolution	1 mVpk (Output>100 mVpk); 0.1 mVpk (Output ≤ 100.0 mVpk)
DC Offset	<10.0 mV (typical)
Output Impedance	< 5 Ω; ±50 mA peak output current.

SINE

Amplitude Accuracy	±1% (0.09 dB) of setting, 0 Hz to 100 kHz, 0.1 Vpk to 1.0 Vpk, high impedance load.		
Frequency Resolution	15.26 mHz (1 kHz/65536)		
Harmonics, Sub-Harmonics,	0.1 Vpk to 1 Vpk	0 to 10 kHz	<-80 dBc
		10 kHz to 100 kHz	<-70 dBc
Spurious Signals	<-100 dBV (typical, line frequency related)		

TWO TONE

Amplitude Accuracy	±1% (0.09 dB) of setting, 0 Hz to 100 kHz, 0.1 Vpk to 0.5 Vpk, high impedance load.		
Frequency Resolution	15.26 mHz (1 kHz/65536)		
Harmonics, Sub-Harmonics	0.1 Vpk to 0.5 Vpk	0 to 10 kHz	<-80 dB below larger tone
		10 kHz to 100 kHz	<-70 dB below larger tone
Spurious Signals	<-100 dBV (typical, line frequency related)		

WHITE NOISE

	Output is 0 Hz to 100 kHz at all measurement spans.
Flatness	<0.25 dB pk-pk (typical), <1.0 dB pk-pk (max) (5000 rms averaged spectra, Source Cal on).

PINK NOISE

	Output is 0 Hz to 100 kHz at all measurement spans.
Flatness	<4.0 dB pk-pk, 20 Hz - 20 kHz (measured using 1/3 octave analysis, Source Cal on).

CHIRP	Output is equal amplitude sine waves at each frequency bin of the measurement span.
Flatness	Measured spectra (all spans, Source Cal on) <0.05 dB pk-pk (typical), <0.2 dB pk-pk (max), Amplitude=1.0 Vpk.
Phase	Auto Phase function calibrates to current phase spectrum.

GENERAL

Monitor	Monochrome CRT. 640H by 480V resolution. Adjustable brightness and screen position.

Interfaces	IEEE-488, RS232 and Printer interfaces standard. All instrument functions can be controlled through the IEEE-488 and RS232 interfaces. A PC keyboard input is provided for additional flexibility.
Hardcopy	Screen dumps and table and setting listings to dot matrix and HP LaserJet compatible printers. Data plots to HP-GL compatible plotters (via RS232 or IEEE-488).
Disk	3.5 inch DOS compatible format, 720 kbyte capacity. Storage of data, setups, data tables, and limit tables.
Power	60 Watts, 100/120/220/240 VAC, 50/60 Hz.
Dimensions	17"W x 6.25"H x 18.5"D
Weight	36 lbs.
Warranty	One year parts and labor on materials and workmanship.

COMMAND LIST

VARIABLES	g	Trace0 (0), Trace1 (1), or Active Trace (-1)
	i,j	Integers
	f	Frequency (real)
	x,y	Real Numbers
	s	String

FREQUENCY	page	description
SPAN (?) {i}	5-4	Set (Query) the Frequency Span to 100 kHz (19) through 191 mHz (0).
STRF (?) {f}	5-4	Set (Query) the Start Frequency to f Hz.
CTRF (?) {f}	5-4	Set (Query) the Center Frequency to f Hz.
OTYP (?) {i}	5-4	Set (Query) the number of bands in Octave Analysis to 15 (0) or 30 (1).
OSTR (?) {i}	5-4	Set (Query) the Starting Band in Octave Analysis to $-2 \le i \le 35$.
WTNG (?) {i}	5-4	Set (Query) the Weighting in Octave Analysis to none (0) or A-weighting (1).

MEASUREMENT	page	description
MEAS (?) g {,i}	5-5	Set (Query) the Measurement Type to Spectrum (0), PSD (1), Time (2), or Octave (3).
DISP (?) g {,i}	5-5	Set (Query) the Display to LogMag (0),LinMag (1), Real (2), Imag (3), or Phase (4).
UNIT (?) g {,i}	5-5	Set (Query) the Units to Vpk or deg (0),Vrms or rads (1), dBV (2), or dBVrms (3).
VOEU (?) g {,i}	5-5	Set (Query) the Units to Volts (0), or EU (1).
EULB (?) g {,s}	5-5	Set (Query) the EU Label to string s.
EUVT (?) g {,x}	5-5	Set (Query) the EU Value to x EU/Volt.
WNDO (?) g {i}	5-5	Set (Query) the Window to Uniform (0), Flattop (1), Hanning (2), or BMH (3).

DISPLAY and MARKER	page	description
ACTG (?) {i}	5-6	Set (Query) the Active Trace to trace0 (0) or trace1 (1).
FMTS (?) g {,i}	5-6	Set (Query) the Display Format to Single (0) or Dual (1) trace.
GRID (?) g {,i}	5-6	Set (Query) the Grid mode to Off (0), 8 (1), or 10 (2) divisions.
FILS (?) g {,i}	5-6	Set (Query) the Graph Style to Line (0) or Filled (1).
MRKR (?) g {,i}	5-6	Set (Query) the Marker to Off (0), On (1) or Track (2).
MRKW (?) g {,i}	5-6	Set (Query) the Marker Width to Norm (0), Wide (1), or Spot (2).
MRKM (?) g {,i}	5-6	Set (Query) the Marker Seeks mode to Max (0), Min (1), or Mean (2).
MRLK (?) {i}	5-6	Set (Query) the Linked Markers to Off (0) or On (1).
MBIN g,i	5-6	Move the marker region to bin i.
MRKX?	5-6	Query the Marker X position.
MRKY?	5-6	Query the Marker Y position.
MRPK	5-6	Move the Marker to the on screen max or min. Same as [MARKER MAX/MIN] key.
MRCN	5-6	Make the Marker X position the center of the span. Same as [MARKER CENTER] key.
MRRF	5-6	Turns Marker Offset on and sets the offset equal to the marker position.
MROF (?) {i}	5-6	Set (Query) the Marker Offset to Off (0) or On (1).
MROX (?) {x}	5-7	Set (Query) the Marker Offset X value to x.
MROY (?) {x}	5-7	Set (Query) the Marker Offset Y value to x.
PKLF	5-7	Move the marker to the next peak to the left.
PKRT	5-7	Move the marker to the next peak to the right.
MSGS s	5-7	Display message s on the screen and sound an alarm.

SCALE	page	description
TREF (?) g {,x}	5-8	Set (Query) the Top Reference to x.
BREF (?) g {,x}	5-8	Set (Query) the Bottom Reference to x.
YDIV (?) g {,x}	5-8	Set (Query) the Vertical Scale (Y/Div) to x.
AUTS g	5-8	AutoScale graph g. Similar to the [AUTO SCALE] key.
EXPD (?) g {,i}	5-8	Set (Query) the Horizontal Expand to no expand (5), 128, 64, 30, 15, or 8 bins (4-0).
ELFT (?) g {,i}	5-8	Set (Query) the Left Bin when expanded to bin i.
XAXS (?) g {,i}	5-8	Set (Query) the X Axis scaling to Linear (0) or Log (1).

INPUT	page	description
ISRC (?) {i}	5-9	Set (Query) the Input to A (0) or A-B (1).
IGND (?) {i}	5-9	Set (Query) the Input Grounding to Float (0) or Ground (1).
ICPL (?) {i}	5-9	Set (Query) the Input Coupling to AC (0) or DC (1).
IRNG (?) {i}	5-9	Set (Query) the Input Range to i dBV full scale. -60 ≤ i ≤ 34 and i is even.
ARNG (?) {i}	5-9	Set (Query) the Auto Range mode to Manual (0) or Auto (1).
AOFF	5-9	Perform Auto Offset calibration.
AOFM (?) {i}	5-9	Set (Query) the Auto Offset Mode to Off (0) or On (1).
TMOD (?) {i}	5-9	Set (Query) the Trigger Mode to Cont (0), Int (1), Ext (2), Ext TTL(3), or source (4).
TRLV (?) {x}	5-9	Set (Query) the Trigger Level to x percent. -100.0 ≤ x ≤ 99.22.
TDLY (?) {i}	5-9	Set (Query) the Trigger Delay to i samples. -13300≤ i ≤ 65000.
ARMM (?) {i}	5-9	Set (Query) the Arming Mode to Auto (0) or Manual (1).
ARMS	5-9	Manually arm the trigger.

ANALYSIS	page	description
ANAM (?) g {,i}	5-10	Set (Query) the real time Analysis to None (0), Harmonic (1), Sideband (2), or Band (3).
CALC? g,i	5-10	Query result i (0 or 1) of the latest real time analysis.
FUND (?) g {,f}	5-10	Set (Query) the Harmonic Fundamental to frequency f Hz.
NHRM (?) g {,i}	5-10	Set (Query) the Number of Harmonics to 0 ≤ i ≤ 400.
NHLT	5-10	Move the Marker or Center Frequency to the next harmonic to the left.
NHRT	5-10	Move the Marker or Center Frequency to the next harmonic to the right.
SBCA (?) g {,f}	5-10	Set (Query) the Sideband Carrier to frequency f Hz.
SBSE (?) g {,f}	5-10	Set (Query) the Sideband Separation to f Hz.
NSBS (?) g {,i}	5-10	Set (Query) the Number of Sidebands to 0 ≤ i ≤ 200.
BSTR (?) g {,f}	5-10	Set (Query) the Band Start to frequency f Hz.
BCTR (?) g {,f}	5-11	Set (Query) the Band Center to frequency f Hz.
BWTH (?) g {,f}	5-11	Set (Query) the Band Width to f Hz.
TABL	5-11	Turn on Data Table display for the active trace.
DTBL (?) g {,i}{,f}	5-11	Set (Query) Data Table line i to frequency f.
DINX (?) {i}	5-11	Set (Query) Data Table index to i.
DINS	5-11	Insert a new line in the data table.
DIDT	5-11	Delete a line from the data table.
DLTB	5-11	Delete the entire data table.
LIMT	5-12	Turn on Limit Table display for the active trace.
TSTS (?) {i}	5-12	Set (Query) the Limit Testing to Off (0) or On (1).
PASF?	5-12	Query the results of the latest limit test. Pass=0 and Fail=1.
LTBL (?) g {,i} {j,f1,f2,y1,y2}	5-12	Set (Query) Limit Table line i to Xbegin (f1), Xend (f2), Y1 and Y2.
LINX (?) {i}	5-12	Set (Query) Limit Table index to i.
LINS	5-12	Insert a new line in the limit table.
LIDT	5-12	Delete a line from the limit table.
LLTB	5-12	Delete the entire limit table.
LARM (?) {i}	5-12	Set (Query) the Audio Limit Fail Alarm to Off (0) or On (1).

AVERAGING	page	description
AVGO (?) {i}	5-13	Set (Query) Averaging to Off (0) or On (1).
NAVG(?) {i}	5-13	Set (Query) the Number of Averages to 2 ≤ i ≤ 32000.
AVGT (?) {i}	5-13	Set (Query) the Averaging Type to RMS (0), Vector (1), or Peak Hold (2).
AVGM (?) {i}	5-13	Set (Query) the Averaging Mode to Linear (0) or Exponential (1).
OVLP (?) {x}	5-13	Set (Query) the Overlap to x percent. 0 ≤ x ≤ 100.0.

SOURCE	page	description
STYP (?) {i}	5-14	Set (Query) Source Type to Off (0), SIne (1), 2-Tone (2), Noise (3) or Chirp (4).
SLVL (?) i {,x}	5-14	Set (Query) the Level of sine, tone 1, tone 2, noise, chirp (i=0..4) to x mV.
SFRQ (?) i {,f}	5-14	Set (Query) the Frequency of sine, tone 1, tone 2 (i=0..2) to f Hz..
NTYP (?) {i}	5-14	Set (Query) the Noise Type to white (0) or pink (1).
SCAL (?) {i}	5-14	Set (Query) Source Cal off (0) or on (1) (noise and chirp only).
APHS	5-14	Do Auto Phase (chirp source only).

PLOT AND PRINT	page	description
PLOT	5-14	Plot the entire graph (or graphs).
PTRC	5-14	Plot the trace (or traces) only.

PMRK	5-14	Plot the marker (or markers) only.
PTTL (?) {s}	6-14	Set (Query) the Plot Title to string s.
PSTL (?) {s}	6-14	Set (Query) the Plot Subtitle to string s.
PRSC	6-14	Print the screen. Same as the [PRINT] key.
PSET	6-14	Print the analyzer settings.
PLIM	6-14	Print the Limit Table of the active graph.
PDAT	6-14	Print the Data Table of the active graph.

SETUP	page	description
OUTP (?) {i}	5-15	Set (Query) the Output Interface to RS232 (0) or GPIB (1).
OVRM (?) {i}	5-15	Set (Query) the GPIB Overide Remote state to Off (0) or On (1).
KCLK (?) {i}	5-15	Set (Query) the Key Click to Off (0) or On (1).
ALRM (?) {i}	5-15	Set (Query) the Alarms to Off (0) or On (1).
THRS (?) {i}	5-15	Set (Query) the Hours to 0≤ i ≤ 23.
TMIN (?) {i}	5-15	Set (Query) the Minutes to 0 ≤ i ≤ 59.
TSEC (?) {i}	5-15	Set (Query) the Seconds to 0 ≤ i ≤ 59.
DMTH (?) {i}	5-15	Set (Query) the Month to 1 ≤ 1 ≤ 12.
DDAY (?) {i}	5-15	Set (Query) the Day to 1 ≤ 1 ≤ 31.
DYRS (?) {i}	5-15	Set (Query) the Year to 0 ≤ 1 ≤ 99.
PLTM (?) {i}	5-15	Set (Query) the Plotter Mode to RS232 (0) or GPIB (1).
PLTB (?) {i}	5-15	Set (Query) the Plotter Baud Rate to 300 (0), 1200 (1), 2400 (2), 4800 (3), 9600 (4).
PLTA (?) {i}	5-15	Set (Query) the Plotter GPIB Address to 0 ≤ i ≤ 30.
PLTS (?) {i}	5-15	Set (Query) the Plot Speed to Fast (0) or Slow (1).
PNTR (?) {i}	5-15	Set (Query) the Trace Pen Number to 1 ≤ i ≤ 6.
PNGD (?) {i}	5-16	Set (Query) the Grid Pen Number to 1 ≤ i ≤ 6.
PNAP (?) {i}	5-16	Set (Query) the Alphanumeric Pen Number to 1 ≤ i ≤ 6.
PNCR (?) {i}	5-17	Set (Query) the Cursor Pen Number to 1 ≤ i ≤ 6.
PRNT (?) {i}	5-17	Set (Query) the Printer Type to Epson (0) or HP (1).

STORE AND RECALL FILE	page	description
FNAM (?) {s}	5-18	Set (Query) the current File Name to string.
SVTR	5-18	Save the Active Trace Data to the file specified by FNAM.
SVTA	5-18	Save the Active Trace Data to the file specified by FNAM as an ASCII file.
SVST	5-18	Save the Settings to the file specified by FNAM.
RCTR	5-18	Recall the Trace Data from the file specified by FNAM to the active graph.
RCST	5-18	Recall the Settings from the file specified by FNAM.

MATH OPERATIONS	page	description
CSEL (?) {i}	5-19	Set (Query) the Operation to +, -, x, /, log, √ (0-5).
COPR	5-19	Start the calculation.
CARG (?) {i}	5-19	Set (Query) the Argument type to Constant (0), w (1), or Other Graph (2).
CONS (?) {x}	5-19	Set (Query) the Constant Argument to x.
CMRK	5-19	Set the Constant Argument to the Y value of the marker.

FRONT PANEL CONTROLS	page	description
STRT	5-20	Start data acquisition. Same as [START] key.
STCO	5-20	Pause or Continue data acquisition. Same as [PAUSE CONT] key.
PRSC	5-20	Print the screen. Same as [PRINT] key.
ACTG (?) {i}	5-20	Set (Query) the Active Trace to trace0 (0) or trace1 (1). Similar to [ACTIVE TRACE] key.
ARNG (?) {i}	5-20	Set (Query) the Auto Range mode to Manual (0) or Auto (1). Similar to [AUTO RANGE] key.
AUTS	5-20	AutoScale the graph. Same as the [AUTO SCALE] key.

DATA TRANSFER	page	description
SPEC? g {,i}	5-21	Query the Y value of bin 0 ≤ i ≤ 399.
BVAL? g, i	5-21	Query the X value of bin 0 ≤ i ≤ 399.
SPEB? g	5-21	Binary dump the entire trace g.
BDMP (?) g, {,i}	5-22	Set (Query) the auto binary dump mode for trace g.

INTERFACE	page	description
*RST	5-23	Reset the unit to its default configurations.

*IDN?	5-23	Read the SR770 device identification string.
LOCL(?) {i}	5-23	Set (Query) the Local/Remote state to LOCAL (0), REMOTE (1), or LOCAL LOCKOUT (2).
OVRM (?) {i}	5-23	Set (Query) the GPIB Overide Remote state to Off (0) or On (1).

STATUS	page	description
*CLS	5-24	Clear all status bytes.
*ESE (?) {i} {,j}	5-24	Set (Query) the Standard Status Byte Enable Register to the decimal value i (0-255).
*ESR? {i}	5-24	Query the Standard Status Byte. If i is included, only bit i is queried.
*SRE (?) {i} {,j}	5-24	Set (Query) the Serial Poll Enable Register to the decimal value i (0-255).
*STB? {i}	5-24	Query the Serial Poll Status Byte. If i is included, only bit i is queried.
*PSC (?) {i}	5-24	Set (Query) the Power On Status Clear bit to Set (1) or Clear (0).
ERRE (?) {i} {,j}	5-24	Set (Query) the Error Status Enable Register to the decimal value i (0-255).
ERRS? {i}	5-24	Query the Error Status Byte. If i is included, only bit i is queried.
FFTE (?) {i} {,j}	5-24	Set (Query) the FFT Status Enable Register to the decimal value i (0-255).
FFTS? {i}	5-24	Query the FFT Status Byte. If i is included, only bit i is queried.

STATUS BYTE DEFINITIONS

SERIAL POLL STATUS BYTE (5-25)

bit	name	usage
0	SCN	No measurements in progress
1	IFC	No command execution in progress
2	ERR	Unmasked bit in error status byte set
3	FFT	Unmasked bit in FFT status byte set
4	MAV	The interface output buffer is non-empty
5	ESB	Unmasked bit in standard status byte set
6	SRQ	SRQ (service request) has occurred
7	Unused	

STANDARD EVENT STATUS BYTE (5-26)

bit	name	usage
0	INP	Set on input queue overflow
1	Limit Fail	Set when a limit test fails
2	QRY	Set on output queue overflow
3	Unused	
4	EXE	Set when command execution error occurs
5	CMD	Set when an illegal command is received
6	URQ	Set by any key press or knob rotation
7	PON	Set by power-on

FFT STATUS BYTE (5-27)

bit	name	usage
0	Triggered	Set when a time record is triggered
1	Prn/Plt	Set when a printout or plot is completed
2	NewData 0	Set when new data is available for trace 0
3	NewData 1	Set when new data is available for trace 1
4	Avg	Set when a linear average is completed
5	AutoRng	Set when auto range changes the range
6	High Voltage	Set when high voltagedetected at input
7	Settle	Set when settling is complete

ERROR STATUS BYTE (5-27)

bit	name	usage
0	Prn/Plt Err	Set when an printing or plotting error occurs
1	Math Error	Set when an internal math error occurs
2	RAM Error	Set when RAM Memory test finds an error
3	Disk Error	Set when a disk error occurs
4	ROM Error	Set when ROM Memory test finds an error
5	A/D Error	Set when A/D test finds an error
6	DSP Error	Set when DSP test finds an error
7	Overload	Set when the signal input overloads

YOUR FIRST MEASUREMENT

This sample measurement is designed to acquaint the first time user with the SR770 Network Analyzer. Do not be concerned that your measurement does not exactly agree with this exercise. The focus of this measurement exercise is to learn how to use the instrument.

There are two types of front panel keys which will be referenced in this section. Hardkeys are those keys with labels printed on them. Their function is determined by the label and does not change. Hardkeys are referenced by brackets like this - [HARDKEY]. The softkeys are the six gray keys along the right edge of the screen. Their function is labelled by a menu box displayed on the screen next to the key. Softkey functions change depending upon the situation. Softkeys will be referenced as the <Soft Key> or simply the Soft Key.

Hardkeys
The keypad consists of five groups of hardkeys. The ENTRY keys are used to enter numeric parameters which have been highlighted by a softkey. The MENU keys select a menu of softkeys. Pressing a menu key will change the menu boxes which are displayed next to the softkeys. Each menu groups together similar parameters and functions. The CONTROL keys start and stop actual data acquisition, select the marker and toggle the active trace the display. These keys are not in a menu since they are used frequently while displaying any menu. The SYSTEM keys output the screen to a printer and display help messages. These keys can also be accessed from any menu. The MARKER keys determine the marker mode and perform various marker functions. The marker functions can be accessed from any menu.

Softkeys

The SR770 has a menu driven user interface. The 6 softkeys to the right of the video display have different functions depending upon the information displayed in the menu boxes at the right of the video display. In general, the softkeys have two uses. The first is to toggle a feature on and off or to choose between settings. The second is to highlight a parameter which is then changed using the knob or numeric keypad. In both cases, the softkey affects the parameter which is displayed adjacent to it.

Knob
The knob is used to adjust parameters which have been highlighted using the softkeys. Most numeric entry fields may be adjusted with the knob. In addition, functions such as display zooming and scrolling use the knob as well. In these cases, the knob function is selected by the softkeys. The [MARKER] key, which can be pressed at any time, will set the knob function to scrolling the marker.

Example Measurement
This measurement is designed to investigate the spectrum of a 1 kHz sine wave. You will need a function generator capable of providing a 1 kHz sine wave at a level of 100 mV to 1 V, such as the SRS DS345. The actual settings of the generator are not important since you will be using the SR770 to measure and analyze its output. Choose a generator which has some distortion (at least -70 dBc) or use a square or triangle wave.

Specifically, you will measure the spectrum of the sine wave, measure its frequency, and measure its harmonic distortion.

ANALYZING A SINE WAVE

1. Turn the analyzer on while holding down the [<-] (backspace) key. Wait until the power-on tests are completed.

   When the power is turned on with the backspace key depressed, the analyzer returns to its default settings. See the Default Settings list in the Menu section for a complete listing of the settings.

2. Turn on the generator, set the frequency to 1 kHz and the amplitude to approximately 1 Vrms.

   Connect the generator's output to the A input of the analyzer.

   The input impedance of the analyzer is 1 M□. The generator may require a terminator. Many generators have either a 50 □ or 600 □ output impedance. Use the appropriate feedthrough termination if necessary. In general, not using a terminator means that the output amplitude will not agree with the generator setting and the distortion may be greater than normal.

3. Press [AUTO RANGE]

   Since the signal amplitude may not be set accurately, let the analyzer automatically set its input range to agree with the actual generator signal. Note that the range readout at the bottom of the screen is displayed in inverse when the autoranging is on.

4. Press the <Span> softkey to highlight the span. Use the knob to adjust the span to 6.25 kHz.

   You can also use the [SPAN UP] and [SPAN DOWN] keys to adjust the span.

   Set the span to display the 1 kHz signal and its first few harmonics.

   You can also use the numeric keypad to enter the span. In this case, the span will be rounded to the next largest allowable span.

5. Press [MARKER MAX/MIN]

   This centers the marker region around the largest data point on the graph. The marker should now be on the 1 kHz signal. The marker readout above the graph displays the frequency and amplitude of the signal.

   The [MARKER MAX/MIN] key can also be configured to search for the minimum point on the graph.

6. Use the knob to move the marker around. Take a look at some of the harmonics.

   Pressing the [MARKER MAX/MIN] key also selects the knob to adjust the marker position. The Span Menu box becomes unhighlighted. A box is drawn around the marker readout to indicate that the knob will move the marker.

7. Let's measure the frequency exactly.

Decrease the span to 1.56 kHz using the <Span> key and knob, the [SPAN DOWN] key or by entering the span numerically.

This isolates the 1 kHz fundamental frequency.

Press [MARKER MAX/MIN]

Move the marker to the peak at 1 kHz.

Press [MARKER CENTER]

This sets the span center frequency to the marker frequency. The signal will be at the center of the span. Further adjustments to the span will keep the center frequency fixed.

8. Decrease the span to 97.5 Hz using the <Span> key and knob, the [SPAN DOWN] key or by entering the span numerically.

You may notice that the spectrum takes a while to settle down at this last span. This is because the frequency resolution is 1/400 of the span or 244 mHz. This resolution requires at least 4.096 seconds of time data. Note that the Settling indicator at the lower left corner of the display will stay on while the data settles.

9. Press [MARKER MAX/MIN]

This centers the marker more accurately. The frequency of the signal can now be read with 244 mHz resolution.

10. Press [AUTO SCALE]

This key adjusts the graph scale and top reference to display the entire range of the data. You can press this key at any time to optimize the graph display.

11. Press [ANALYZE]

Display the Analysis menu.

Press <Harmonic>

Select Harmonic analysis. The menu displays the harmonic analysis menu. Notice that the fundamental frequency (first menu box) has been set to the frequency of the marker.

We used a narrow span to get an accurate reading of the fundamental signal frequency. We will use this measurement of the fundamental to accurately locate the harmonics.

The harmonic measurement readout at the upper left corner of the graph is under range because the span is not wide enough to include any harmonics.

12. Press <Next Harmonic Right>

This centers the span around the second harmonic (approx. 2 kHz). You are now making an accurate measurement of the 2nd harmonic content of the signal.

Use the <Next Harmonic Right> and <Next Harmonic Left> keys to investigate the harmonics of the signal.

With this narrow span, the harmonics should be easily visible.

13. Press [FREQ]

Press <Full Span>

Press [AUTO SCALE]

Let's have the analyzer measure the distortion for us. First return to full span by displaying the frequency menu and choosing full span.

Return the graph to a scale where the fundamental is on screen.

14. Press <Start Freq.>

This highlights the Start Frequency menu box. It also fixes the start frequency when the span is adjusted.

Now adjust the span to 12.5 kHz using the <Span> key and knob, the [SPAN DOWN] key or by entering the span numerically.

Reduce the span to resolve the first few harmonics of the signal.

15. Press [ANALYZE]

Press <Harmonic>

Display the Analysis menu.

Choose Harmonic analysis. (It should still be on from before.) The fundamental frequency should still be accurately set.

16. Press <# Harmonics>

Press [1] [1] <Enter>

Highlight the number of harmonics menu box.

Enter 11 for the number of harmonics.

Notice that harmonic markers (little triangles) appear on top of all of the harmonic peaks. These indicate which data points are used in the harmonic calculations.

The harmonic calculations are displayed in the upper left corner of the graph. The top reading is the harmonic level (absolute units) and the lower reading is the distortion (harmonic level divided by the fundamental level).

17. Now let's measure some harmonics using the reference marker.

Press <Return>

Return the menu display to the main Analysis menu.

Press <None>

Choose No analysis. This turns off the harmonic indicators and calculations.

Press [MARKER MAX/MIN]

This moves the marker to the fundamental peak.

Press [MARKER REF]

This sets the marker reference or offset to the frequency and amplitude of the fundamental. The marker readout above the graph now reads relative to this offset. This is indicated by the Δ in front of the marker readout. A small star shaped symbol is located at the screen location of the reference.

The [MARKER REF] key also allows the knob to move the marker.

Use the knob to measure the harmonic levels relative to the fundamental.

The marker readout is now relative to the reference or fundamental level.

Pressing [MARKER REF] again removes the marker offset.

18. Press [MARKER REF]

This concludes this measurement example. You should have a good feeling for the basic operation of the menus, knob and numeric entry, and marker movement and measurements.

SECOND MEASUREMENT EXAMPLE

This sample measurement is designed to further acquaint the user with the SR770 Network Analyzer. Do not be concerned that your measurement does not exactly agree with this exercise. The focus of this measurement exercise is to learn how to use the instrument.

There are two types of front panel keys which will be referenced in this section. Hardkeys are those keys with labels printed on them. Their function is determined by the label and does not change. Hardkeys are referenced by brackets like this - [HARDKEY]. The softkeys are the six gray keys along the right edge of the screen. Their function is labelled by a menu box displayed on the screen next to the key. Softkey functions change depending upon the situation. Softkeys will be referenced as the <Soft Key> or simply the Soft Key.

The Measurement

This measurement is designed to investigate the noise of an audio amplifier. You will need an audio frequency amplifier such as the SRS SR560. We will use the SR770's source to provide the test signal.

Specifically, you will measure the output signal/noise ratio of the amplifier and its input noise level.

MEASURING AMPLIFIER NOISE

1. Turn the analyzer on while holding down the [<-] (backspace) key. Wait until the power-on tests are completed.

   When the power is turned on with the backspace key depressed, the analyzer returns to its default settings. See the Default Settings list in the Menu section for a complete listing of the settings.

2. Turn on the amplifier and set its gain to at least 20 dB.

   Connect the amplifier output to the A input of the analyzer.

   The input impedance of the analyzer is 1 M□. The amplifier output may require a terminator. Many instruments have either a 50 □ or 600 □ output impedance. Use the appropriate feedthrough termination if necessary. In general, not using a terminator means that the output amplitude will not agree with the instrument setting and the distortion may be greater than normal.

   Press [SOURCE]

   Display the Source menu.

   Press <Sine>

   Turn on the Sine output.

   Press <Configure Source>

   Display the sine configuration menu.

   Press <Level>

   Highlight the Sine Output Level. Leave the frequency at 1 kHz.

   Press [1] [0] [0] <mV>

   Enter 100 mV (pk).

   Connect the SR770 Source output to the amplifier input.

   This should be a small enough signal for the amplifier to handle. If not, simply lower the sine output level to a suitable level.

3. Press [AUTO RANGE]

   Since the amplifier output amplitude may not be set accurately, let the analyzer automatically set its input range to the actual signal.

   Press [FREQ]

   Display the Frequency menu.

   Press [SPAN DOWN] until the span is 6.25 kHz

   Set the span to display the 1 kHz signal and its first few harmonics.

   Press [AUTO SCALE]

   Set the graph scaling to display the entire range of the data.

4. Press [MARKER MAX/MIN]

   Move the marker to the signal peak (1 kHz). The marker should read an amplitude equal to the source output level times the amplifier gain.

   Press [MARKER REF]

   This turns on the marker offset and sets the reference marker to the current marker position. From now on, the marker will now read relative to

the signal peak. A □ is displayed before the marker readout to indicate that the reading is relative. A small star symbol is located on the graph at the marker offset position.

Use the knob to move the marker to a region that is representative of the noise floor.

The [MARKER REF] key automatically allows the knob to adjust the marker position. The marker is now providing a direct reading of the signal to noise ratio. Remember, this is the S/N for the source/amplifier combination.

Press [MARKER REF] again

The [MARKER REF] key toggles the marker offset on and off. We now want to turn the offset off.

5. Press [MEAS]

Display the Measure menu.

Press <Measure Menu>

Choose the Measurement type menu.

Press <PSD>

Select Power Spectral Density. The PSD approximates the amplitude of the signal within a 1 Hz bandwidth located at each frequency bin. This allows measurements taken with different linewidths (spans) to be compared.

To get a better measurement of noise, a little averaging can help.

6. Press [AVERAGE]

Display the Average menu.

Press <Average Mode>

Select Exponential averaging.

Press <Number of Averages>

Highlight the Number of Averages menu box.

Press [2] [0] <Enter>

Enter 20 averages.

Press <Averaging>

Turn averaging on. Notice how the noise floor approaches a more stable value. We are using RMS averaging to determine the actual noise floor. See the section on Averaging for a discussion of the different types of averaging.

7. Press [MARKER]

The [MARKER] key allows the knob to move the marker.

Use the knob to move the marker to a region representative of the noise floor.

The Marker reading should be in dBV/□Hz. This is the output noise amplitude at the marker frequency, normalized to a 1 Hz bandwidth. To generalize to other bandwidths, multiply by the square root of the bandwidth. This approximation only holds if the noise is Gaussian in nature.

Press [MEAS]

Display the Measure menu.

Press <Units Menu>

Choose the Units menu.

Press <Volts RMS>

Select Volts RMS as the display units.

The marker now reads in Volts RMS /□Hz. This is a typical way of specifying amplifier input noise levels.

8. Disconnect the source output from the amplifier. Leave the amplifier input terminated (with 50 Ohms).

Now we are measuring the amplifier's output noise with a shorted input. If you take the noise measurement and divide by the amplifier gain, then you will have the amplifier's input noise at the frequency of the marker reading.

An FFT is a convenient tool for measuring amplifier noise spectra since the noise at many frequencies can be determined in a single measurement.

USING TRIGGERS AND THE TIME RECORD

This sample measurement is designed to acquaint the user with the triggering capabilities of the SR770 Network Analyzer. Do not be concerned that your measurement does not exactly agree with this exercise. The focus of this measurement exercise is to learn how to use the instrument.

There are two types of front panel keys which will be referenced in this section. Hardkeys are those keys with labels printed on them. Their function is determined by the label and does not change. Hardkeys are referenced by brackets like this - [HARDKEY]. The softkeys are the six gray keys along the right edge of the screen. Their function is labelled by a menu box displayed on the screen next to the key. Softkey functions change depending upon the situation. Softkeys will be referenced as the <Soft Key> or simply the Soft Key.

The Measurement

This measurement is designed to investigate the trigger and time record. You will need a function generator capable of providing a 100 µs wide pulse at 250 Hz with an amplitude of 1 V. The output should have a DC level of 0V.

Specifically, you will measure the output spectrum when the signal is triggered. In addition, the trigger delay will be used to delay the signal within the time record.

Make sure that you have read "The Time Record" in the Analyzer Basics section before trying this exercise.

TRIGGERING THE ANALYZER

1. Turn the analyzer on while holding down the [<-] (backspace) key. Wait until the power-on tests are completed.

   When the power is turned on with the backspace key depressed, the analyzer returns to its default settings. See the Default Settings list in the Menu section of this manual for a complete listing of the settings.

2. Turn on the generator and choose a pulsed output waveform. Set the frequency to 250 Hz, the pulse width to 100 µs and the amplitude to approximately 1 V. Make sure that the DC level of the output is near 0V.

   Connect the generator's output to the A input of the analyzer.

   The input impedance of the analyzer is 1 M□. The generator may require a terminator. Many generators have either a 50 □ or 600 □ output impedance. Use the appropriate feedthrough termination if necessary. In general, not using a terminator only means that the output amplitude will not agree with the generator setting and the distortion may be greater than normal.

3. Press [INPUT]

   Let's choose DC coupling and an input range that doesn't overload.

   Press <Coupling> to choose DC

   Press <Input Range>

   Set the input range to 4 dBV. Adjust the pulse amplitude so that no overloads occur.

   Press [4] <dBV>

4. Press [DISPLAY]

   Show two traces.

   Press <Format> to choose Up/Dn

5. Press [MEAS]

   We will show the time record on the upper trace.

   Press <Measure Menu>

   Go to the Measure menu to choose Time Record.

   Press <Time Record>

   Press <Return>

   Press <Display Menu>

   Let's show the time record on a linear scale.

   Press <Linear Mag.>

6. Press [INPUT]

   Now set up the trigger.

   Press <Trigger Menu>

   Press <Trigger> to select Internal

   Trigger on the signal itself.

   Press <Trigger Level>

   The input is a 1 V pulse so set the trigger level to

0.5 V.

Press [.] [5] <Volts>

Press [AUTO SCALE]

The upper trace should display the pulse waveform at the left edge. Auto scale will set the display limits automatically. Remember that we are displaying the magnitude of the signal. Any negative portion of the signal will be folded back around zero and appear as a positive magnitude.

7. Press [MEAS]

Press <Window Menu>

Press <Uniform>

Because the pulse is much shorter than the time record, we need to use the Uniform window. The other window functions taper to zero at the start and end of the time record. Always be aware of the effect windowing has on the FFT of the time record.

Press [ACTIVE TRACE]

There should now be a spectrum on the lower trace. Use [AUTO SCALE] to set the display.

Press [AUTO SCALE]

The spectrum you see is the sinx/x envelope of a rectangular pulse. The zeroes in the spectrum occur at the harmonics of 1/pulse width (1/100µs or 10 kHz).

8. Press <Hanning>

Now choose the Hanning window. Notice how the spectrum goes away. We can get the spectrum back by delaying the time record relative to the trigger so that the pulse is positioned in the center of the time record.

9. Press [INPUT]

Go back to the Trigger submenu.

Press <Trigger Menu>

Press <Trigger Delay>

Highlight the Trigger Delay menu box.

Press [2] [5] [6] <Samples>

Enter 256 samples of delay. Because the pulse repetition rate is 250 Hz, the period between pulses is exactly equal to one time record. So setting the delay to half of a time record will place the pulse at the middle of the record.

Remember that the time record only displays the first 400 points (out of 512) so that the middle of the record is not the middle of the display trace.

The spectrum should reappear on the lower trace. This is because windowing preserves the central part of the time record.

10. Press [4] [7] [5] <Samples>

Let's delay the signal some more. Now we've delayed the time record by almost a full period. The pulse is now near the end of the time record.

Notice how the spectrum is greatly attenuated. This is the effect of the window function attenuating the start of the timer record.

11. Press <Trigger> to select Continuous

Now if we go to continuous triggering, the time record becomes unstable. The spectrum is also unstable because of the windowing. Some time records place the pulse at the middle, some at the ends.

12. Press [MEAS]

    Press <Window>

    Press <Uniform>

If we set the window back to Uniform, we find that the spectrum does not vary with the position of the pulse within the time record.

USING THE DISK DRIVE

The disk drive on the SR770 may be used to store 3 types of files.

1. Data File
   This includes the data in the active trace, the measurement and display type, the units and the graph scaling. In addition, the associated data and limit tables are stored in this file as well. Data files may be recalled into either trace0 or trace1.

2. ASCII Data File
   This file saves the data in the active trace in ASCII format. These files may not be recalled to the display. This format is convenient when transferring data to a PC application.

3. Settings File
   This files stores the analyzer settings. Recalling this file will change the analyzer setup to that stored in the file.

The disk drive uses double-sided, high density (DS/HD) 3.5" disks. The disk capacity is 1.44M. The SR770 uses the DOS format. A disk which was formatted on a PC or PS2 may also be used. Files written by the SR770 may be copied or read on a DOS computer.

Data files can store data in either binary or ascii format. Binary format uses less disk space. Ascii format allows trace data to be read by other programs using a PC.

There are two types of front panel keys which will be referenced in this section. Hardkeys are those keys with labels printed on them. Their function is determined by the label and does not change. Hardkeys are referenced by brackets like this - [HARDKEY]. The softkeys are the six gray keys along the right edge of the screen. Their function is labelled by a menu box displayed on the screen next to the key. Softkey functions change depending upon the situation. Softkeys will be referenced as the <Soft Key> or simply the Soft Key.

The Measurement
This measurement is designed to familiarize the user with the disk drive. We will use the SR770 source to provide a test signal so that there is some data to save and recall.

Specifically, you will save and recall a data file and a settings file.

STORING AND RECALLING DATA

1. Turn the analyzer on while holding down the [<-] (backspace) key. Wait until the power-on tests are completed.

   When the power is turned on with the backspace key depressed, the analyzer returns to its default settings. See the Default Settings list in the Menu section for a complete listing of the settings.

2. Connect the SR770 Source output to the A input.

   Press [SOURCE]

   Display the Source menu.

   Press <Sine>

   Turn on the Sine output. Leave the sine frequency and level at the default settings (1 kHz and 1 Vpk).

3. Press [AUTO RANGE]

   Let the analyzer automatically set its input range.

4. Press [SPAN DOWN] until the span is 6.25 kHz

   Set the span to display the 1 kHz signal.

5. Press [AUTO SCALE]

   Set the graph scaling to display the entire range of the data.

6. Press [PAUSE CONT]

   Stop data acquisition. The graph on the screen is the one we want to save. (You can actually save graphs while the analyzer is running.)

7. Put a blank double-sided, high density (DS/HD)3.5" disk into the drive.

   Use a blank if disk if possible, otherwise any disk that you don't mind formatting will do. Make sure the write protect tab is off.

   Let's format this disk.

8. Press [STORE RECALL]

   Display the Store and Recall menu.

   Press <Disk Utilities>

   Choose Disk Utilities.

   Press <Format Disk>

   Make sure that the disk does not contain any information that you want. Formatting the disk takes about a minute.

9. Press <Return>

   Go back to the main Store and Recall menu.

   Press <Save Data>

   Display the Save Data menu.

10. Press <File Name>	Now we need a file name.
Press [ALT]	[ALT] lets you enter the letter characters printed below each key. The numbers and backspace function as normal.
Press [D] [A] [T] [A] [1] <Enter>	Enter a file name such as DATA1 (or any legal DOS file name).
11. Press <Save Data>	This saves the active trace data to disk using the file name specified above.
12. Press <Catalog>	Display the disk catalog. This display lists all of the files on the disk.
13. Press <File Name>	Save the data again using a new file name. This way you can have multiple files in the disk catalog.
Press [ALT]	
Press [D] [A] [T] [A] [2] <Enter>	
Press <Save Data>	
14. Press <Return>	Go back to the main Store and Recall menu.
Press [START]	Resume data acquisition. The graph should be live again.
Remove the input signal cable.	Now we have a spectrum which is different from the one we just saved. Recalling the data from disk will restore the graph to what it was.
15. Press <Recall Data>	Display the Recall Data menu.
Press <Catalog>	Display the disk catalog. The 2 files which you just saved should be listed.
16. Press [MARKER]	Pressing the [MARKER] key allows the knob to adjust the marker. When the disk catalog is displayed, the marker highlights a file. Use the knob to choose a file to recall.
17. Press <Recall Data>	This recalls the data file from disk and displays it on the active graph. Data acquisition is stopped so that the graph is not updated. The file name is

displayed below the graph.

The marker may be moved on the recalled graph to read specific data points. The graph scaling may also be changed.

18. Press [DISPLAY] — Show the Display menu.

    Press <Format> — Choose the Up/Dn dual trace display format.

    Press [ACTIVE TRACE] — Make trace1 active (the lower graph). The active graph has a highlighted label at its upper right.

19. Press [START] — This restarts data acquisition, but only for the active trace (trace1). The recalled trace on trace0 is still displayed. To restart data acquisition on trace0, press [ACTIVE TRACE] to make trace0 (upper graph) active and then [START].

STORING AND RECALLING SETTINGS

1. Turn the analyzer on while holding down the [<-] (backspace) key. Wait until the power-on tests are completed.

   When the power is turned on with the backspace key depressed, the analyzer returns to its default settings. See the Default Settings list in the Menu section for a complete listing of the settings.

2. Press [SPAN DOWN] a number of times to change the span.

   Change the analyzer setup so that we have a non-default setup to save.

   Press [INPUT]

   Show the Input menu.

   Press <Coupling>

   Choose DC coupling.

3. Press [STORE RECALL]

   Display the Store and Recall menu.

   Press <Save Settings>

   Choose the Save Settings menu.

4. Press <File Name>

   Now we need a file name.

   Press [ALT]

   [ALT] lets you enter the letters printed below each key. The numbers and backspace function as normal.

   Press [T] [E] [S] [T] [1] <Enter>

   Enter a file name such as TEST1 (or any legal DOS file name).

5. Press <Save Settings>

   Save the analyzer setup to disk using the file name specified above.

6. Press [SPAN UP] a number of times to change the span.

   Change the analyzer setup again.

   Press [INPUT]

   Show the Input menu.

   Press <Coupling>

   Choose AC coupling.

   Now let's recall the analyzer setup that we just saved.

7. Press [STORE RECALL]

   Display the Store and Recall menu.

   Press <Recall Settings>

   Choose the Recall Settings menu.

   Press <Catalog>

   Display the disk catalog listing. Note that data files have the type DAT and setting files have the type SET.

8. Press [MARKER]

Pressing the [MARKER] key allows the knob to adjust the marker. When the disk catalog is displayed, the marker highlights a file. Use the knob to choose the file TEST1 to recall. (Or use the <File Name> key to enter the file name.)

9. Press <Recall Settings>

This recalls the settings from the file TEST1. The analyzer settings are changed to those stored in TEST1. The span and input coupling should be the same as those in effect when you created the file.

Note that the STOP-Invld indicator is flashing at the bottom of the screen. This means that the display data does not match the analyzer settings or the graph parameters. Remember, we just recalled the settings which paused the data acquisition before changing the settings. Pressing [START] will start data acqusition with the new settings.

USING DATA TABLES

A data table reports the Y values for user listed X-axis values. For example, the entries could be a set of harmonic frequencies which need to be measured. The data table is a convenient way to measure the data values at various points without moving the marker around and manually recording the answers. To generate a printed report of the measurement, the data table may be printed using the Plot menu.

Each trace has its own data table though only the table associated with the active trace is on and displayed at any time.

Data tables are saved along with the trace data when data is saved to disk.

Data tables are not stored in non-volatile memory and are not retained when the power is turned off.

Remember that the values in the table do not have units associated with them. An X location of 10 kHz is stored as 10 k and a Y value of -20 dBV is reported as simply -20. The Y values come directly from the graph so it is important to use the proper display units to get consistent data table readings.

There are two types of front panel keys which will be referenced in this section. Hardkeys are those keys with labels printed on them. Their function is determined by the label and does not change. Hardkeys are referenced by brackets like this - [HARDKEY]. The softkeys are the six gray keys along the right edge of the screen. Their function is labelled by a menu box displayed on the screen next to the key. Softkey functions change depending upon the situation. Softkeys will be referenced as the <Soft Key> or simply the Soft Key.

The Measurement

This measurement is designed to familiarize the user with the data tables. We will use the SR770 Source to provide a test signal so that there is some data to report.

Specifically, you will generate a data table to measure some harmonics as well as the noise floor.

DATA TABLES

1. Turn the analyzer on while holding down the [<-] (backspace) key. Wait until the power-on tests are completed.

   When the power is turned on with the backspace key depressed, the analyzer returns to its default settings. See the Default Settings list in the Menu section for a complete listing of the settings.

2. Connect the SR770 Source output to the A input.

   Press [SOURCE]

   Display the Source menu.

   Press <Sine>

   Turn on the Sine output. Leave the sine frequency and level at the default settings (1 kHz and 1 Vpk).

3. Press [AUTO RANGE]

   Let the analyzer automatically set its input range.

4. Press [SPAN DOWN] until the span is 6.25 kHz

   Set the span to display the 1 kHz signal.

5. Press [AUTO SCALE]

   Set the graph scaling to display the entire range of the data.

6. Press [ANALYZE]

   Display the Analysis menu.

   Press <Data Table>

   Select Data Table display. The display switches to dual trace format with the spectrum on top and the data table listed below.

7. Press [MARKER MAX/MIN]

   This moves the marker to the peak of the spectrum. This should center the marker on the 1 kHz fundamental frequency.

   Press <X Value>

   Highlight the X Value menu box.

   Press [MARKER ENTRY]

   This copies the marker X position into the X Value menu box. The X value of data table line 0 is now equal to the 1 kHz signal frequency. The Y value of line 0 is updated each time the graph is updated.

8. Press <Table Index>

   This highlights the Table Index menu box. Let's add another line to the data table.

   Press [1] <Enter>

   Entering an index or line number beyond the end of the table adds a new line to the end.

9. Press <X Value>

   Press [2] <kHz>

Highlight the X Value menu box.

Enter the frequency of the 2nd harmonic into the data table.

Line 1 now has the frequency of the 2nd harmonic. Note how the Y values update with the graph.

In the Analysis menu, many of the frequencies or X values may be entered by copying the X location of the marker (using [MARKER ENTRY]) or by entering the numerical value with the keypad.

Let's add another line to the table.

10. Press <Table Index>

    Press [2] <Enter>

Highlight the X Value menu box.

11. Press <X Value>

    Press [2] [.] [5] [4] <kHz>

Enter some frequency which is representative of the noise floor of the signal.

We decided that we wanted another harmonic in the table. This key inserts a new line before the highlighted line.

12. Press <Insert Item>

We could enter an X value for this new line now.

But we changed our mind. Let's delete this line.

    Press <Delete Item>

Display the System menu.

13. Press [SYSTEM]

Display the Printing submenu.

    Press <Print>

If we have a printer attached, then the <Print Data> function will print the data table, with updated Y values.

Show the Display menu.

14. Press [DISPLAY]

    Press <Format>

Choose the Single trace display format. This removes the data table display and restores the screen to a single trace display.

USING LIMIT TABLES

A limit table lists the XY coordinates of the line segments which define the trace test limits. When trace data exceeds these limit segments, then the test fails. The limit table is a convenient way to test devices against a specification defined over a range of frequencies. To generate a printed listing of a limit table, use the Print Limits function in the Plot menu.

Each trace has its own limit table though only the table associated with the active trace is on and displayed at any time.

Limit tables are saved along with the trace data when data is saved to disk.

Limit tables are not stored in non-volatile memory and are not retained when the power is turned off.

Remember that the values in the table do not have units associated with them. An X location of 10 kHz is stored as 10 k and a Y value of -20 dBV is simply -20. The limit test compares the data on the graph (in the display units) to the Y values in the table. It is important to use the correct units in the display to get consistent limit table tests.

There are two types of front panel keys which will be referenced in this section. Hardkeys are those keys with labels printed on them. Their function is determined by the label and does not change. Hardkeys are referenced by brackets like this - [HARDKEY]. The softkeys are the six gray keys along the right edge of the screen. Their function is labelled by a menu box displayed on the screen next to the key. Softkey functions change depending upon the situation. Softkeys will be referenced as the <Soft Key> or simply the Soft Key.

The Measurement

This measurement is designed to familiarize the user with the limit tables. We will use the SR770 Source to provide a test signal so that there is some data to test.

Specifically, you will generate a limit table to test the signal level as well as the noise floor.

LIMIT TABLES

1. Turn the analyzer on while holding down the [<-] (backspace) key. Wait until the power-on tests are completed.

   When the power is turned on with the backspace key depressed, the analyzer returns to its default settings. See the Default Settings list in the Menu section for a complete listing of the settings.

2. Connect the SR770 Source output to the A input.

   Press [SOURCE]

   Display the Source menu.

   Press <Sine>

   Turn on the Sine output. Leave the sine frequency and level at the default settings (1 kHz and 1 Vpk).

3. Press [AUTO RANGE]

   Let the analyzer automatically set its input range.

4. Press [SPAN DOWN] until the span is 6.25 kHz

   Set the span to display the 1 kHz signal and its first few harmonics.

5. Press [AUTO SCALE]

   Set the graph scaling to display the entire range of the data.

6. Press [ANALYZE]

   Display the Analysis menu.

   Press <Limit Table>

   Select Limit Table display. The display switches to dual trace format with the spectrum on top and the limit table listed below.

7. Press [MARKER MAX/MIN]

   This moves the marker to the peak of the spectrum and measures the fundamental frequency.

   Let's define an upper limit for the 1 kHz peak.

8. Press <X Values>

   Highlight the upper X Value menu field.

   Press [9] [0] [0] <Hz>

   Enter a frequency below the signal frequency.

   Press <X Values> again

   Highlight the lower X Value menu field.

   Press [1] [.] [1] <kHz>

   Enter a frequency higher than the signal frequency.

   As with data tables, it is also possible to copy the marker X location into the X value fields. But this time we want frequencies above and below the peak so we entered them numerically.

	Highlight the upper Y values menu field.
9. Press <Y Values>	Enter a value somewhat less than the signal peak.
Press [-] [5] <Enter>	Highlight the lower Y values menu field.
Press <Y Values>	Enter a value somewhat less than the signal peak.
Press [-] [5] <Enter>	Notice that small line segment is drawn on the display. This line starts at (Xbegin,Y1) and ends at (Xend, Y2) and represents a limit segment. If the data exceeds this limit (since it is an upper limit), then the FAIL indicator will flash at the bottom of the screen. The FAIL indicator should be flashing now.
	Display the second limits menu.
10. Press <More>	Set the audio alarm on. Now whenever a trace is taken that exceeds the limit, an alarm sounds.
Press <Audio Alarm>	Set the audio alarm off. You're probably ready to turn off the alarms by now anyway.
Press <Audio Alarm>	Go back to the main limits menu.
Press <Return>	Highlight the upper Y values menu field.
Press <Y Values>	Enter a value higher than the signal peak.
Press [2] <Enter>	Highlight the lower Y values menu field.
Press <Y Values>	Enter a value higher than the signal peak.
Press [2] <Enter>	The limit segment is now entirely above the signal peak and the PASS indicator is on at the bottom of the screen. Remember, this segment is an upper limit.
	Let's add another segment to this table.
	Highlight the Table Index menu box.
11. Press <Table Index>	Entering an index or line number beyond the end of the table adds a new line to the end.
Press [1] <Enter>	Notice how the new segment is a continuation of the previous one. This makes building a continuous limit much simpler. The starting point of the new line equals the ending point of the previous one.

The new segment's length along the X axis is the same as the previous segment's. The only thing you need to edit is the value of Y2 and your new segment is finished.

But let's go on to define a noise floor limit.

12. Press <X Values> until the upper field is highlighted.

    Press [2] [.] [2] <kHz>

    Press <X Values>

    Press [2] [.] [8] <kHz>

Enter a segment which is between harmonics. In this case, between 2.2 and 2.8 kHz. This is representative of the noise floor.

Define an upper limit a little above the noise floor.

13. Press <YValues> until the upper field is highlighted.

    Press [-] [9] [0] <Enter>

    Press <Y Values>

    Press [-] [9] [0] <Enter>

In this case, we define an upper noise limit of -90 dB.

There should now be a horizontal segment above the noise floor between 2.2 and 2.8 kHz. The limit test should still PASS.

14. Press <Limit Type>

This switches the noise limit from an upper limit to a lower limit. Since the data will now be below the lower limit, the test will FAIL.

Display the second limits menu.

15. Press <More>

    Press <Testing>

Set limit testing to OFF. It is possible to display the limit table without testing taking place. This is helpful when a lot of the X values on the graph have defined limits. The testing can slow down the response of the analyzer noticeably. It is simpler to define the limits with testing off.

Show the Display menu.

14. Press [DISPLAY]

    Press <Format>

Choose the Single trace display format. This removes the limit table display and restores the screen to a single trace display. No testing occurs when the limit table is not displayed.

USING TRACE MATH

The Calculator submenu allows the user to perform arithmetic calculations with the trace data. Operations are performed on the entire trace, regardless of graphical expansion.

Calculations treat the data as intrinsic values, either Volts, Engineering Units or degrees. If a graph is showing dB, then multiplying by 10 will raise the graph by 20 dB and dividing by 10 will lower the graph by 20 dB.

Performing a calculation on the active trace will set the File Type to Calc to indicate that the trace is not Live. This is shown by the "File=Calc" message at the lower left of the graph. The analyzer continues to run but the calculated trace will not be updated. To return the trace to live mode, activate the trace and press the [START] key. The File Type will return to Live.

There are two types of front panel keys which will be referenced in this section. Hardkeys are those keys with labels printed on them. Their function is determined by the label and does not change. Hardkeys are referenced by brackets like this - [HARDKEY]. The softkeys are the six gray keys along the right edge of the screen. Their function is labelled by a menu box displayed on the screen next to the key. Softkey functions change depending upon the situation. Softkeys will be referenced as the <Soft Key> or simply the Soft Key.

The Measurement

This measurement is designed to familiarize the user with the trace math capabilities. We will use the SR770 Source to provide a test signal.

Specifically, you will ratio a spectrum with a reference spectrum.

TRACE MATH

1. Turn the analyzer on while holding down the [<-] (backspace) key. Wait until the power-on tests are completed.

   When the power is turned on with the backspace key depressed, the analyzer returns to its default settings. See the Default Settings list in the Menu section for a complete listing of the settings.

2. Connect the SR770 Source output to the A input.

   Press [SOURCE] — Display the Source menu.

   Press <Sine> — Turn on the Sine output.

   Press <Configure Source> — Display the Sine frequency and level.

   Press <Level> — Select the Sine output level.

   Press [-] [3] <dBV> — Enter -3 dBV for the Sine output level. Note that the Sine level can be entered in either mV (pk) or dBV (pk).

3. Press [AUTO RANGE] — Let the analyzer automatically set its input range.

4. Press [SPAN DOWN] until the span is 6.25 kHz — Set the span to display the 1 kHz signal and its first few harmonics.

5. Press [AUTO SCALE] — Set the graph scaling to display the entire range of the data.

6. Press [MEAS] — Display the Measure menu.

   Press <Calculator Menu> — Select the Calculator menu.

7. Press <Do Calc> — This operation defaults to adding zero to the trace data. The default operation is +, the default argument is the constant zero. We're doing this so that the trace does not update. This is now the graph we will use as the reference data.

   Reference data normally comes from a disk file. Recalling a stored file brings the data back to the active graph but does not update it. See "Using the Disk Drive" earlier in this section.

8. Press [DISPLAY] — Bring up the Display menu.

Press <Format>

Choose the Up/Dn dual trace format. The reference graph will be the upper trace (Trace0) and the live graph will be the lower trace (Trace1).

Press <Marker Width> twice to choose Spot Marker.

Make the marker on the upper graph a spot marker.

Press [ACTIVE TRACE]

Let's make the live graph the active trace.

Press <Marker Width> twice to choose Spot Marker.

Make the marker on the lower graph a spot marker.

9. Press [MARKER MODE]

Display the Marker Mode menu.

Press <Linked Markers>

Link the two markers together. Now when the knob moves one marker, they both move together. Since they are both spot markers, the frequencies which they read on both graphs are identical.

Press [MAX/MIN]

Move the markers to the signal peak (1 kHz).

10. Press [SOURCE]

Bring up the Source menu.

Press <Configure Source>

Display the Sine frequency and level menu.

Press <Level>

Select the Sine output level.

Press [-] [2] [0] <dBV>

Enter -20 dBV.

The reference amplitude may be read from the marker readout of the upper graph. The live amplitude may be read from the marker of the lower graph.

Now we have 2 traces which differ in amplitude. Let's take the ratio.

Go back to the Calculator menu.

11. Press [MEAS]

Press <Calculator Menu>

We will divide the active graph (Trace1 Live) by the inactive graph (Trace0 reference).

Press <Argument Type> twice to select Other Graph.

Select the divide operation.

Press <Operation> three times to select '/' (divide).

12. Press <Do Calc>

Do the calculation. Since the graphs are displayed in dBV, the ratio of the peaks should simply be the difference in their amplitudes expressed in dBV. Remember, the calculations work on the underlying

data points (in Volts).

The active graph now displays the ratio of the two traces in dB.

Press [AUTO SCALE]

The marker on the lower graph should read the difference between the two peak amplitudes (-17.0 dB). Clearly, only the frequencies which correspond to the signal and its harmonics have much meaning in this ratio. One noise floor divided by another noise floor is going to be pretty noisy.

A better way to read these harmonic ratios is using the data table. A data table can display the values of selected frequencies in easy to read form. See "Using Data Table" earlier in this section. The data table would be defined for Trace1.

Other operations which may be performed are +, -, x, /, square root, log, phase unwrap and d/dx. The second argument may be a constant (for scaling or offset), ω (2ðf to differentiate or integrate the spectrum), or the other graph (reference trace from disk).

USING THE SOURCE

The SR770 has a built in signal source capable of providing a variety of test signals.

SINE
A low distortion sine wave for general purpose gain, distortion and signal/noise measurements. The sine source is synchronous with the FFT, i.e. sine waves can be generated at exact bin frequencies of the FFT. This can eliminate windowing effects in the measured amplitude and phase.

TWO TONE
Two low distortion sine waves can be generated simultaneously for intermodulation distortion tests (IMD). Each tone has independent frequency and amplitude settings.

NOISE
Broadband noise is useful for characterizing circuits, mechanical systems or even the audio response of an entire room. White noise provides equal amplitude per root Hz from 0 to 100 kHz. White noise is useful in electronic applications. Pink noise rolls off at 3 dB/oct providing equal amplitude per octave. Pink noise is preferred in audio applications.

CHIRP
The Chirp source provides an equal amplitude sine wave at each bin of the displayed spectrum. Since there are 400 bins in a spectrum, the chirp is the sum of 400 discrete sine waves. The phases of each sine wave are arranged so that they do not add in phase and the resulting output does not peak. This source is useful for measuring transfer functions quickly without having to make many discrete measurements using a single sine wave.

There are two types of front panel keys which will be referenced in this section. Hardkeys are those keys with labels printed on them. Their function is determined by the label and does not change. Hardkeys are referenced by brackets like this - [HARDKEY]. The softkeys are the six gray keys along the right edge of the screen. Their function is labelled by a menu box displayed on the screen next to the key. Softkey functions change depending upon the situation. Softkeys will be referenced as the <Soft Key> or simply the Soft Key.

The Measurement
This measurement is designed to familiarize the user with the source capabilities. We will use the SR770 Source to provide a test signal.

Specifically, you will measure the spectrum of each of the source types, taking advantage of the fact that the built in source is synchronous with the FFT.

USING THE SINE SOURCE

1. Turn the analyzer on while holding down the [<-] (backspace) key. Wait until the power-on tests are completed.

   When the power is turned on with the backspace key depressed, the analyzer returns to its default settings. See the Default Settings list in the Menu section for a complete listing of the settings.

2. Connect the SR770 Source output to the A input.

   Press [SOURCE] — Display the Source menu.

   Press <Sine> — Turn on the Sine output.

   Press <Configure Source> — Display the Sine frequency and level.

   Press <Level> — Select the Sine output level.

   Press [-] [3] <dBV> — Enter -3 dBV for the Sine output level. Note that the Sine level can be entered in either mV (pk) or dBV (pk).

   Press [MARKER MAX/MIN] — Move the marker to the signal peak. The marker should be centered at the 1 kHz signal and display a level of -3 dBV.

4. Press <Frequency> — Select the Sine frequency.

   Use the knob to adjust the frequency to 50.00 kHz. — When the knob is used to adjust the sine frequency, the frequency resolution is equal to the linewidth of the displayed spectrum. In this case, since we are at full span, the linewidth is 250 Hz (100 kHz/400). This always puts the sine exactly on a frequency bin of the spectrum.

   Press [MARKER MAX/MIN] — Move the marker to the signal peak.

   Press <Frequency> — Select the Sine frequency.

   Press [5] [0] [.] [0] [1] <kHz> — The keypad allows random frequencies to be entered. The fundamental frequency resolution of the sine source is 15.26 mHz. The entered frequency will be rounded to the nearest multiple of 15.26 mHz. In this case, 50.01 kHz is rounded to 50.0099945 kHz (only 5.5 mHz off).

   Use the knob to adjust the frequency to 10 kHz. — When the knob is used again, the frequency resolution returns to the linewidth and the frequency immediately jumps to the nearest multiple of the linewidth.

Generally, the sine frequency should be an exact bin frequency, this eliminates windowing effects and allows for source triggering and vector averaging.

5. Press [AVERAGE]

   Display the Averaging menu.

   Press <Number of Averages>

   Highlight the number of averages.

   Press [2] [0] <Enter>

   Change the number of averages to 20.

   Press <Average Mode> to select Exponential.

   Select exponential averaging so the display is live.

   Press <Averaging> to turn on averaging.

   Turn averaging on.

   Notice how the noise floor has averaged to a stable value. RMS averaging averages the magnitude of the signal and reduces the fluctuations in the data. Note that harmonics may now be visible.

6. Press [MARKER MAX/MIN]

   Move the marker to the signal peak at 10 kHz.

   Press [MARKER REF]

   This turns on the marker offset and sets the reference marker to the current marker position. From now on, the marker will read relative to the signal peak. A □ is displayed before the marker readout to indicate that the reading is relative. A small star symbol is located on the graph at the marker offset position.

   Use the knob to move the marker to the signal harmonics.

   The ref marker gives a direct reading of the harmonic levels relative the fundamental.

   Press [MARKER REF]

   Pressing [MARKER REF] again turns off the reference marker.

7. Press [INPUT]

   Display the Input menu.

   Press <Trigger Menu>

   Go to the Trigger menu.

   Press <Trigger> 4 times to select Source.

   Select Source Trigger. This is a special trigger mode. The spectra are taken with no overlap (at all spans) but without using the trigger circuits. When each time record finishes, the next one begins without delay. Any signal which is EXACTLY periodic over a time record will be the same in EVERY time record. For this type of signal, this has the same effect as triggering.

   If the source sine frequency is an exact multiple of

the linewidth, then the source will appear triggered. This only works with the SR770's own source since it is clocked with the same crystal timebase as the input time record. A separate sine generator will invariably drift relative to the SR770's timebase and the generator's sine frequency will drift away from an exact bin frequency.

To see how this works, we need to vector average.

Go back to the Average menu.

8. Press [AVERAGE]

   Press <Average Type> to select Vector.

Vector averaging averages the complex FFT spectrum. This reduces the level of signals which are not phase coherent from time record to time record, such as noise.

Notice that the noise floor is actually reduced but the signal and its harmonics stay the same amplitude. This is because the source (and its harmonics) are at an exact bin frequency and are EXACTLY the same in each time record.

Even though the signal has a stable phase within each time record, the absolute phase of the signal is arbitrary. This is because the SR770 does not turn on and off the source synchronously with the FFT.

Go back to the Source menu.

Display the Sine frequency and level.

9. Press [SOURCE]

   Press <Configure Source>

   Press <Frequency>

   Press [1] [0] [.] [1] <kHz>

Select the frequency.

Set the frequency to 10.1 kHz. This is NOT an exact bin frequency. Note that the signal peak is dramatically reduced. This is the effect of vector averaging a non-coherent signal.

The signal peak is restored to its correct value once the frequency is an exact bin frequency again.

   Use the knob to set the frequency back to 10 kHz.

Go back to the Average menu.

Turn averaging off.

10. Press [AVERAGE]

    Press <Averaging> to turn averaging off.

Display the Measure menu.

Choose the Window menu. Windowing is used to turn a non-periodic time record into a periodic one.

Press [MEAS]	Read "Windowing" in the Analyzer Basics section for more information. In this case, the source sine is exactly periodic over a time record so windowing is not required.
Press <Window Menu>	
	The uniform window is no window at all. The signal peak is unchanged in amplitude but has no frequency width. This is because the signal is exactly on a frequency bin.
Press <Uniform>	
	Note that this only works when the noise level is very low. If the sine is noisy, then windowing will still be required to achieve a clean spectrum.
	Go back to the Source menu.
	Display the Sine frequency and level.
11. Press [SOURCE]	Select the frequency.
Press <Configure Source>	Set the frequency to 10.1 kHz. This is NOT an exact bin frequency. Note that the signal peak is dramatically affected in both amplitude and frequency width. This is because this frequency is not periodic in the time record. The end points of the time record are not equal and represent a large step discontinuity. The spectrum of this discontinuity is spread over the entire spectrum.
Press <Frequency>	
Press [1] [0] [.] [1] <kHz>	
	Display the Measure menu.
	Choose the Window menu.
Press [MEAS]	Choose a non-uniform window. The window function allows the non-periodic signal to be analyzed. Note that the signal peak frequency is reported as 10.00 kHz (even though the signal is at 10.1 kHz). This is because the FFT only results in 400 discrete frequency bins. The signal peak is also wider than with the uniform window. Windows decrease the selectivity of the spectrum by widening the signal peaks. The amplitude of the peak is also wrong. This is because window functions have amplitude variations for signals between bins.
Press <Window Menu>	
Press <BMH>	
	All in all, the sine source should be used with an exact bin frequency whenever possible. This allows source triggering (no jitter trigger, regardless of signal to noise ratio) and vector averaging as well as eliminating window effects.

USING THE TWO TONE SOURCE

1. Turn the analyzer on while holding down the [<-] (backspace) key. Wait until the power-on tests are completed.

   When the power is turned on with the backspace key depressed, the analyzer returns to its default settings. See the Default Settings list in the Menu section for a complete listing of the settings.

2. Connect the SR770 Source output to the A input.

   Press [SOURCE]

   Display the Source menu.

   Press <2-Tone>

   Turn on the Sine output.

   Press [AUTO RANGE]

   Let the analyzer select the input range

   Press [MARKER MAX/MIN]

   The spectrum has two equal signal peaks at 1 kHz and 9 kHz. The two tone source is simply the sum of two sine waves. Each tone has its own amplitude and frequency which are adjusted in the same manner as the single sine.

3. Press <Configure Source>

   Display the frequency and level of each tone.

   Press <Frequency 1>

   Select the frequency of tone 1.

   Use the knob to adjust the frequency to 10 kHz.

   When the knob is used to adjust the tone frequency, the frequency resolution is equal to the linewidth of the displayed spectrum. In this case, since we are at full span, the linewidth is 250 Hz (100 kHz/400). This always puts the tone exactly on a frequency bin of the spectrum.

   The keypad allows random frequencies to be entered. The fundamental frequency resolution of the sine is 15.26 mHz. The entered frequency will be rounded to the nearest multiple of 15.26 mHz.

   Generally, the tone frequency should be an exact bin frequency, this eliminates windowing effects and allows for source triggering and vector averaging.

4. Press [MARKER MAX/MIN]

   Move the marker to the signal peak. The marker picks the larger tone (they should be just about equal).

   Press [MARKER CENTER]

   This narrows the span and puts the center of the span on one of the tones.

Press [AVERAGE]	Display the Average menu.
Press <Number of Averages>	Highlight the number of averages.
Press [2] [0] <Enter>	Enter 20 averages.
Press <Average Mode> to select Exponential.	Select exponential averaging so that the display is live.
Press <Averaging> to turn averaging on.	Turn averaging on. Notice how the noise floor has averaged to a stable value. RMS averaging averages the magnitude of the signal and reduces the fluctuations in the data. Note that distortion products may now be visible. Intermodulation distortion (IMD) results in signal sidebands separated by the difference frequency. In this case, the two tones are at 9 and 10 kHz and the difference is 1 kHz. Thus, IMD products will show up at 8, 7, .. kHz and 11, 12, .. kHz.
5. Press [MARKER MAX/MIN]	Move the marker to the signal peak.
Press [MARKER REF]	This turns on the marker offset and sets the reference marker to the current marker position. From now on, the marker will read relative to the signal peak. A □ is displayed before the marker readout to indicate that the reading is relative. A small star symbol is located on the graph at the marker offset position.
Use the knob to measure the distortion components.	Note that the distortion products are separated by 1 kHz increments from the two tone frequencies. They should also be very small (<-80 dB) relative to the tone amplitudes. In this configuration, it is not possible to determine whether the distortion exists at the source output or the signal input. This measurement determines the sensitivity of any IMD measurement made using the two tone source.

USING THE NOISE SOURCE

1. Turn the analyzer on while holding down the [<-] (backspace) key. Wait until the power-on tests are completed.

   When the power is turned on with the backspace key depressed, the analyzer returns to its default settings. See the Default Settings list in the Menu section for a complete listing of the settings.

2. Connect the SR770 Source output to the A input.

   Press [SOURCE]

   Display the Source menu.

   Press <Noise>

   Turn on the Noise output.

   Press [AUTO RANGE]

   Let the analyzer select the input range.

   The spectrum is flat noise from 0 to 100 kHz at a level of approximately -30 dBV. The input range has auto-ranged to a much higher level, around 4dBV. This is because the peak output voltage is greater than 1 V.

3. Press <Configure Source>

   Display the noise configuration menu.

   Press <Noise Level>

   Select the noise level. The noise level is approximately the peak amplitude of the noise output. There will be occasional voltage excursions beyond this level. Because of the nature of noise, the peak amplitude is not a well defined quantity.

   Press [1] [0] [0] <mV>

   Enter a noise level of 100 mV. This lowers the noise spectrum by 20 dB.

   Press [1] [0] [0] [0] <mV>

   Restore the noise level back to 1000 mV.

4. Press [INPUT]

   Display the Input menu.

   Press <Auto Offset> to select Off.

   Turn off Auto Offset before we start averaging.

   Press [AVERAGE]

   Display the Average menu.

   Press <Number of Averages>

   Highlight the number of averages.

   Press [4] [0] [0] [0]<Enter>

   Enter 4000 averages.

   Press <Averaging> to turn averaging on.

   Turn averaging on and wait until the average is complete. In Linear average mode, at the end of 4000 averages, the analyzer will stop.

   Notice how the noise has averaged to a stable

value. RMS averaging averages the magnitude of the signal and reduces the fluctuations in the data. Note that the noise spectrum is flat.

Press [AUTO SCALE]

Change the display scale so that the fluctuations in the spectral flatness are visible.

The noise output spectrum covers 0 to 100 kHz, regardless of the analysis span. The source is digitally synthesized and passes through an output reconstruction filter. The Source Cal feature adjusts the input calibrations to compensate for this output filter's ripple. The actual signal at the Source Output is not affected. (The output ripple is measured at the factory and is not adjustable by the user.)

Source Cal only has an effect if the source is Noise or Chirp. Source Cal can be turned off in the Configure Noise or Chirp menu.

Never select Noise or Chirp source with Source Cal On and use an external signal source! The input calibrations are modified and will result in measurement errors unless the SR770 internal source is used as the test signal!

Display the Measure menu.

5. Press [MEAS]

Go to the Measure submenu.

Press <Measure Menu>

Select Power Spectral Density.

Press <PSD>

Auto scale the graph.

Press [AUTO SCALE]

The spectrum measures the amount of noise within a linewidth of each frequency bin. Since the linewidth is simply 1/400th of the span, the amount of noise signal in each bin will decrease with the span. Power Spectral Density (PSD) normalizes all measurements to a 1 Hz bandwidth (instead of the linewidth). Since white noise is Gaussian, it has a constant noise density (V/□Hz). Measurements with the same bandwidth will yield the same noise level. Thus, PSD will measure the same noise at any span.

Move the marker.

Press [MARKER]

Read the PSD at 50 kHz. Remember this number.

Use the knob to center the marker at 50 kHz.

Change the span to 25 kHz.

Press [SPAN DOWN] twice to select a 25 kHz span.

Press [FREQ]

Press <Center Freq.>

Press [5] [0] <kHz>

Press [START]

Go to the Frequency menu.

Highlight the Center Frequency.

Enter 50 kHz.

Take another spectra.

The final PSD level should be the same as the reading taken at full span at 50 kHz. (The reading is not exactly the same of course. That would take an infinite number of averages.)

Remember, the noise output covers the spectrum from 0 to 100 kHz, regardless of the measurement span. In this case, the measurement span extends from 37.5-62.5 kHz while the noise output is still full span.

The response of many systems is characterized using noise as the input. White noise (equal noise in equal bandwidth) is generally used in electronic measurements. Pink noise (equal noise per frequency octave) is preferred in acoustic systems, such as the natural response of an enclosure or speaker. White noise generates a flat Power Spectral Density curve. Pink noise generates a flat response in Octave Analysis.

USING THE CHIRP SOURCE

1. Turn the analyzer on while holding down the [<-] (backspace) key. Wait until the power-on tests are completed.

   When the power is turned on with the backspace key depressed, the analyzer returns to its default settings. See the Default Settings list in the Menu section for a complete listing of the settings.

2. Connect the SR770 Source output to the A input.

   Press [SOURCE]

   Display the Source menu.

   Press <Chirp>

   Turn on the Chirp output.

   Press [AUTO RANGE]

   Let the analyzer select the input range.

   The Chirp source provides an equal amplitude sine wave at each bin of the displayed spectrum. The phases of each sine wave are arranged so that they do not add in phase and the resulting output does not peak. Because of cancellation, not all sine waves are present during all portions of the time record. Since the input time record is windowed, some portions of the time record are attenuated, This results in certain frequency ranges in the spectra being attenuated. Hence the spectrum has peaks and valleys and is generally not useful when windowed.

3. Press [MEAS]

   Display the Measure menu.

   Press <Window Menu>

   Show the Window menu.

   Press <Uniform>

   Select a Uniform window (no windowing).

   The spectrum becomes an almost flat line.

   Since the chirp waveform consists of the 400 displayed bin frequencies, it is EXACTLY periodic over a time record. Every time record is the same (except for noise). An exactly periodic waveform requires no window. In this case, the window actually removes spectral information which we need.

4. Press [INPUT]

   Display the Input menu.

   Press <Trigger Menu>

   Go to the Trigger menu.

   Press <Trigger> 4 times to select Source.

   Select Source Trigger. This is a special trigger

mode. The spectra are taken with no overlap (at all spans) but without using the trigger circuits. When each time record finishes, the next one begins without delay. Any signal which is EXACTLY periodic over a time record will be the same in EVERY time record. For this type of signal, this has the same effect as triggering.

We need to use source triggering in order to get phase information from this spectrum.

Press <Return>

Go back to the main Input menu.

Press <Auto Offset> to select Off.

Turn off Auto Offset. In order to preserve the phase information from source triggering, we need to turn off Auto Offset calibration. The SR770 does not synchronize phase when turning the source on and off. Hence, the phase of the chirp components will be stable but arbitrary. The Auto Offset calibration interrupts the input and restarts data acquisition without synchronization. Thus, the phases of the components will change whenever Auto Offset calibration occurs, disrupting our measurements.

5. Press [SCALE]

Show the Scale menu.

Press <Y/Div>

Highlight the Y (vertical) scale.

Turn the knob to change the vertical scale to 0.5 dB/div.

Zoom in so that the ripple in the spectrum is easily visible. This spectrum has very little ripple. If this source was the input to a device under test, the output spectrum would be the amplitude transfer function of the device.

The chirp source is digitally synthesized and passes through an output reconstruction filter. The Source Cal feature adjusts the input calibrations to compensate for this output filter's ripple. The actual signal at the Source Output is not affected. (The output ripple is measured at the factory and is not adjustable by the user.)

Source Cal only has an effect if the source is Noise or Chirp. Source Cal can be turned off in the Configure Noise or Chirp menu.

Never select Noise or Chirp source with Source Cal On and use an external signal source! The input calibrations are modified and will result in measurement errors unless the SR770 internal source is used as the test signal!

The amplitude of each frequency component is

roughly -32dB relative to the peak output. If the individual frequency components were perfectly random, then each would be 1/□400 (-26 dB) of the peak. However, the chirp source is deterministic and each frequency component has a fixed phase relative to all the other components. This reduces the amplitude of each component by another 6dB (worsens the crest factor). Thus, the dynamic range of the measurement is reduced when using the chirp source.

Go to the Display menu.

5. Press [DISPLAY]

Display two traces.

Press <Format> to select Up/Dn.

The active trace has its trace identifier (upper right of graph) displayed in inverse. Make the lower trace the active trace.

Press [ACTIVE TRACE] to select the lower trace.

Go to the Measure menu.

Press <MEAS>

Show the Display submenu.

Press <Display Menu>

Display the phase of the spectrum on the lower graph.

Press <Phase>

The phases of the frequency components of the chirp are stable (but seemingly random). To measure the phase response of a device under test, we need to calibrate the phase of the source.

Go back to the Source menu.

Press [SOURCE]

Show the chirp output configuration menu.

Press <Configure Source>

The Auto Phase function measures the current phase spectrum. This phase spectrum is stored in memory and subtracted from subsequent phase spectra to remove the phase of the chirp source.

Press <Auto Phase>

The phase spectrum now shows 0° at all frequencies. If a device under test is inserted between the source and the input, the lower graph will show the phase response of the device.

Auto phase is removed when the span is changed or the source type is changed.

Change the span.

Press [SPAN DOWN]

Back to 100 kHz span.

Press [SPAN UP]

The phase calibration is removed whenever the

span is changed. Remember, if phase information is desired, Auto Phase must be performed after every span change. (Auto Offset also disrupts the phase.)

Go to the Display menu.

6. Press [DISPLAY]

Display the phase as a full screen graph.

Press <Format> to select Single.

The phase spectrum of the chirp is quite complicated looking. The phase changes quite quickly from -180 to +180 degrees. Many filters exhibit similar large phase shifts. Sometimes it is more informative to view the phase spectrum as "unwrapped" phase. Unwrapping attempts to display the phase as a continuous unbounded curve instead of from -180 to +180 degrees.

Go to the Measure menu.

7. Press [MEAS]

Select the Calculator menu.

Press <Calculator Menu>

Select the unwrap operation.

Press <Operation> 6 times to select unwrap.

Do the calculation.

Press <Do Calc.>

Scale the resulting graph. The phase curve is now a much simpler curve varying between very large phases. Unwrapping can make complicated phase curves more understandable if there is a relationship between adjacent frequency bins.

Press [Auto Scale]

The derivative of the phase with respect to frequency (x axis) is the group delay.

8. Press <Operation> to select d/dx.

Do the derivative calculation. This brings up a submenu to select the aperture. The aperture (as a percentage of 400 bins) over which the derivative is calculated needs to be selected.

Press <Do Calc.>

Choose a narrow aperture.

Press <1.25%>

The resulting group delay curve shows a linear group delay over several regions of the spectrum. Group delay is actually $d\theta/d\omega$ where θ is in radians. To convert the numerator to radians, multiply by $2\delta/360$. To convert from d/dx to $d/d\omega$ divide the curve by 2δ * linewidth. Altogether, we need to divide the curve by 1/360*linewidth.

9. Press <Operation> to select / (divide).

	Highlight the argument (denominator).
Press <Argument>	360 x 250 Hz = 90000 sec-1.
Press [9] [0] [0] [0] [0] <Enter>	Convert the curve to group delay (in seconds).
Press <Do Calc.>	The graph still reads out in degrees though the actual units are now sec. The calculator does math with numbers (not units). We need to remember the appropriate units to assign to the marker. The group delay varies between -1.9 ms to +1.9 ms.
Press [AUTO SCALE]	
	Using the chirp source, the SR770 can measure amplitude and phase transfer curves for a device under test. The amplitudes are calibrated using the Source Cal mode. The phase spectrum can be calibrated to zero at any time using the Auto Phase function. Phases relative to the stored phase curve are displayed live. This gives the SR770 the functionality of a network analyzer with only a single input channel.

THINGS TO WATCH OUT FOR

If the analyzer is on but doesn't seem to be taking data, there are a number of things to check.

1) Press the [START] key to make sure that the indicator at the lower left of the screen displays RUN instead of STOP.

2) Check if linear averaging is on. When the analyzer finishes a linear average of N spectra, the analyzer stops and the data is no longer updated. Press [START] to take another average.

3) Make sure the triggering mode is CONTinuous. Otherwise, the analyzer may be waiting for a trigger (as shown by the Trg Wait indicator at the bottom of the screen).

4) If the unit is being triggered, check that the arming mode is set to AUTO. If the arming mode is MANUAL, then the analyzer will only trigger once and then wait for the next manual arming command.

5) Check that the data is on scale by using [AUTORANGE] and [AUTOSCALE].

6) Make sure that the analyzer is not in the REMOTE state where the computer interfaces have locked out the front panel. Press the LOCAL key (the [HELP] key) to restore local control.

If the analyzer still seems to function improperly, turn the power off and turn it back on while holding down the [<-] (backspace) key. This will reset the analyzer into the default configuration. The analyzer should power on running and taking spectra.

WHAT IS AN FFT SPECTRUM ANALYZER?

The SR770 FFT Spectrum Analyzer takes a time varying input signal, like you would see on an oscilloscope trace, and computes its frequency spectrum.

Fourier's basic theorem states that any waveform in the time domain can be represented by the weighted sum of pure sine waves of all frequencies. If the signal in the time domain (as viewed on an oscilloscope) is periodic, then its spectrum is probably dominated by a single frequency component. What the spectrum analyzer does is represent the time domain signal by its component frequencies.

Why look at a signal's spectrum?
For one thing, some measurements which are very hard in the time domain are very easy in the frequency domain. Take harmonic distortion. It's hard to quantify the distortion by looking at a good sine wave output from a function generator on an oscilloscope. When the same signal is displayed on a spectrum analyzer, the harmonic frequencies and amplitudes are displayed with amazing clarity. Another example is noise analysis. Looking at an amplifier's output noise on an oscilloscope basically measures just the total noise amplitude. On a spectrum analyzer, the noise as a function of frequency is displayed. It may be that the amplifier has a problem only over certain frequency ranges. In the time domain it would be very hard to tell.

Many of these types of measurements used to be done using analog spectrum analyzers. In simple terms, an analog filter was used to isolate frequencies of interest. The remaining signal power was measured to determine the signal strength in certain frequency bands. By tuning the filters and repeating the measurements, a reasonable spectrum could be obtained.

The FFT Analyzer
An FFT spectrum analyzer works in an entirely different way. The input signal is digitized at a high sampling rate, similar to a digitizing oscilloscope. Nyquist's theorem says that as long as the sampling rate is greater than twice the highest frequency component of the signal, then the sampled data will accurately represent the input signal. In the SR770, sampling occurs at 256 kHz. To make sure that Nyquist's theorem is satisfied, the input signal passes through an analog filter which attenuates all frequency components above128 kHz by 90 dB. This is the anti-aliasing filter. The resulting digital time record is then mathematically transformed into a frequency spectrum using an algorithm known as the Fast Fourier Transform or FFT. The FFT is simply a clever set of operations which implements Fourier's basic theorem. The resulting spectrum shows the frequency components of the input signal.

Now here's the interesting part. The original digital time record comes from discrete samples taken at the sampling rate. The corresponding FFT yields a spectrum with discrete frequency samples. In fact, the spectrum has half as many frequency points as there are time points. (Remember Nyquist's theorem). Suppose that you take 1024 samples at 256 kHz. It takes 4 ms to take this time record. The FFT of this record yields 512 frequency points, but over what frequency range? The highest frequency will be determined by the period of 2 time samples or 128 kHz. The lowest frequency is just the period of the entire record or 1/(4 ms) or 250 Hz. Everything below 250 Hz is considered to be dc. The output spectrum thus represents the frequency range from dc to 128 kHz with points every 250 Hz.

Advantages and limitations
The advantage of this technique is its speed. The entire spectrum takes only 4 ms to measure. The limitation of this measurement is its resolution. Because the time record is only 4 ms long, the frequency resolution is only 250 Hz. Suppose the signal has a frequency component at 260 Hz. The FFT spectrum will detect this signal but place part of it in the 250 Hz point and part in the 500 Hz point. One way to measure this signal accurately is to take a time record that is 1/260 or 3.846 ms long with 1024 evenly spaced samples. Then the signal would land all in one frequency bin. But this would require changing the sampling rate based upon the signal (which you haven't measured yet). Not a good solution. In fact, the way to measure the signal accurately is to lengthen the time record and change the span of the spectrum.

FREQUENCY SPANS

Before we continue, let's clarify a couple of points about our frequency span. We just described how we arrived at a dc to 128 kHz frequency span using a 4 ms time record. Because the signal passes through an anti-aliasing filter at the input, the entire frequency span is not useable. The filter has a flat response from dc to 100 kHz and then rolls off steeply from 100 kHz to 128 kHz. No filter can make a 90 dB transition instantly. The range between 100 kHz and 128 kHz is therefore not useable and the actual displayed frequency span stops at 100 kHz. There is also a frequency bin labelled 0 Hz (or dc). This bin actually covers the range from 0 Hz to 250 Hz (the lowest measurable frequency) and contains the signal components whose period is longer than the time record (not only dc). So our final displayed spectrum contains 400 frequency bins. The first covers 0 - 250 Hz, the second 250 - 500 Hz, and the 400th covers 99.75 - 100.0 kHz.

Spans less than 100 kHz

So the length of the time record determines the frequency span and resolution of our spectrum. What happens if we make the time record 8 ms or twice as long? Well we ought to get 2048 time points (sampling at 256 kHz) yielding a spectrum from dc to 100 kHz with 125 Hz resolution containing 800 points. But the SR770 places some limitations on this. One is memory. If we keep increasing the time record, then we would need to store more and more points. Another limitation is processing time. The time it takes to calculate an FFT with more points increases more than linearly. The net result is that the SR770 always takes 1024 point FFT's to yield 400 point spectra.

Here's how it's done. The analyzer digitally filters the incoming data samples (at 256 kHz) to limit the bandwidth. This is similar to the anti-aliasing filter at the input except the digital filter's cutoff frequency can be changed. In the case of the 8 ms record, the filter reduces the bandwidth to 64 kHz with a filter cutoff of 50 kHz (the filter rolls off between 50 and 64 kHz). Remember that Nyquist only requires samples at twice the frequency of the highest signal frequency. Thus the digital filter only has to output points at 128 kHz or half of the input rate (256 kHz). The net result is the digital filter outputs a time record of 1024 points effectively sampled at 128 kHz to make up an 8 ms record. The FFT processor operates on a constant number of points and the resulting FFT will yield 400 points from dc to 50 kHz. The resolution or linewidth is 125 Hz.

This process of doubling the time record and halving the span can be repeated by using multiple stages of digital filtering. The SR770 can process spectra with a span of only 191 mHz with a time record of 2098 seconds if you have the patience. However, this filtering process only yields baseband measurements (frequency spans which start at dc).

Starting the span somewhere other than dc

Besides being able to choose the span and resolution of the spectrum, we would also like the span to be able to start at frequencies other than dc. It would be nice to center a narrow span around any frequency below 100 kHz. Using digital filtering alone requires that every span start at dc. What is needed is heterodyning. Heterodyning is the process of multiplying the incoming signal by a sine wave. The resulting spectrum is shifted by the frequency of the sine wave. If we incorporate heterodyning with our digital filtering, we can shift any frequency span so that it starts at dc. The resulting FFT yields a spectrum offset by the heterodyne frequency. When this spectrum is displayed, the frequencies of the X axis are the frequencies of the actual signal, not the heterodyned frequencies.

Heterodyning allows the analyzer to compute zoomed spectra (spans which start at frequencies other than dc). The digital filter processor can filter and heterodyne the input in real time to provide the appropriate filtered time record at all spans and center frequencies. Because the digital signal processors in the SR770 are so fast, you won't notice any calculation time while taking spectra. The longest it can take to acquire a spectrum is the length of the time record itself. But more about that later.

THE TIME RECORD

Now that we've described the process in simple terms, let's complicate it a little bit. The SR770 actually uses 512 point complex time records. Each point is a complex value (with real and imaginary parts) so the record actually has 1024 data points in it. But how does a real point get to be complex?

As we described in the previous section, the input samples are digitally filtered and heterodyned to produce a time record with the appropriate bandwidth and a constant number of samples. What we need to add to this is that the heterodyning is a complex operation. This means that the input points are multiplied by both sine and cosine to yield a real and imaginary part.

So instead of using 1024 real points, we use 512 complex points. The time records have the same duration so the complex record has half the sampling rate of the real record. Thus at full span, the real points would occur at 256 kHz and the complex points at 128 kHz. You can think of the complex record as two separate records, one real and one imaginary, each with 64 kHz of bandwidth. (1/2 of the sample rate). One covers 0 to +64 kHz and the other covers -64 kHz to 0 for a total bandwidth of 128 kHz (the same bandwidth as the real record). What a negative frequency means is beyond this discussion but suffice to say it works the same.

The time record display
What do you see when you display the time record? Clearly the time record is not as simple as the raw digitized data points you would see if this were a digital oscilloscope.

The analyzer stores the 512 point complex time record described above. Because the display is designed for 400 point spectra, only the first 400 points of the time record are displayed. You can use the trigger delay to "translate" the time record to see the part not normally displayed.

The time record for every span has been digitally filtered and heterodyned into a complex record. You can display the magnitude, real or imaginary part as well as the phase. Normally, the easiest display to understand is Linear Magnitude. Remember that magnitudes are always positive. The negative parts of the waveform will be folded around zero so that they appear positive.

Because of the filtering and heterodyning, the time waveform may not closely resemble the input signal. For baseband measurements (when the start frequency of the span is 0.0 Hz) the waveform will resemble the signal waveform (with folding if magnitude is displayed). The bandwidth will be limited by the anti-alias filter and the digital filtering. For zoomed measurements (when the span start is not 0.0 Hz) the displayed waveform will not closely resemble the input signal because of the heterodyning.

Why use the time record?
The time display can be useful in determining whether the time record is triggered properly. If the analyzer is triggered, either internally by the signal or externally with another pulse, and the signal has a large component synchronous with the trigger, then the time record should appear stationary on the display. If the signal triggers randomly, then the time display will jitter back and forth.

Watch out for windowing!
The time display is not windowed. This means the time record which is displayed will be multiplied by the window function before the FFT is taken (see "Windowing" later in this section). Most window functions taper off to zero at the start and end of the time record. If the transient signal occurs at the start of the time record, the corresponding FFT may not show anything because the window function reduces the transient to zero.

Either use a Uniform window with transients, or use the trigger delay to position the transient at the center of the time record. (Remember that the display only shows the first 400 points of the record. The center is always at the 256th sample, which is not at the center of the display.)

To repeat, the time record is not a snapshot of the input signal. It is the output of the digital filter and the input to the FFT processor.

MEASUREMENT BASICS

Now that we know that the input to the FFT processor is a complex time record, it should be no surprise to find out that the resulting FFT spectrum is also a complex quantity. This is because each frequency component has a phase relative to the start of the time record. If there is no triggering, then the phase is random and we generally look at the magnitude of the spectrum. If we use a synchronous trigger then each frequency component has a well defined phase.

Spectrum
The spectrum is the basic measurement of an FFT analyzer. It is simply the complex FFT. Normally, the magnitude of the spectrum is displayed. The magnitude is the square root of the FFT times its complex conjugate. (Square root of the sum of the real part squared and the imaginary part squared). The magnitude is a real quantity and represents the total signal amplitude in each frequency bin, independent of phase.

If there is phase information in the spectrum, i.e. the time record is triggered in phase with some component of the signal, then the real or imaginary part or the phase may be displayed. Remember, the phase is simply the arctangent of the ratio of the imaginary and real parts of each frequency component. The phase is always relative to the start of the triggered time record.

Power Spectral Density or PSD
The PSD is simply the magnitude of the spectrum normalized to a 1 Hz bandwidth. This measurement approximates what the spectrum would look like if each frequency component were really a 1 Hz wide piece of the spectrum at each frequency bin.

What good is this? When measuring broadband signals such as noise, the amplitude of the spectrum changes with the frequency span. This is because the linewidth changes so the frequency bins have a different noise bandwidth. The PSD, on the other hand, normalizes all measurements to a 1 Hz bandwidth and the noise spectrum becomes independent of the span. This allows measurements with different spans to be compared. If the noise is Gaussian in nature, then the amount of noise amplitude in other bandwidths may be approximated by scaling the PSD measurement by the square root of the bandwidth. Thus the PSD is displayed in units of V/□Hz or dBV/□Hz.

Since the PSD uses the magnitude of the spectrum, the PSD is a real quantity. There is no real or imaginary part or phase.

Octave Analysis
The magnitude of the normal spectrum measures the amplitudes within equally divided frequency bins. Octave analysis computes the spectral amplitude within 1/3 octave bands. The start and stop frequencies of each frequency bin are in the ratio of 1/3 of an octave ($2^{1/3}$). The octave analysis spectra will closely resemble data taken with older analog type equipment commonly used in acoustics and sound measurement.

To compute the amplitude of each band, the normal FFT is taken. Those bins which fall within a single band are rms summed together (square root of the sum of the squared magnitudes). The resulting amplitudes are real quantities and have no phase information. They represent total signal amplitude within each band.

We will have more about octave analysis later.

DISPLAY TYPES

Spectrum
The most common measurement is the spectrum and the most useful display is the Log Magnitude. The Log Mag display graphs the magnitude of the spectrum on a logarithmic scale using dBV as units.

Why is the Log Mag display useful? Remember that the SR770 has a dynamic range of 90 dB and a display resolution of -114 dB below full scale. Imagine what something 0.01% of full scale would look like on a linear scale. If we wanted it to be 1 centimeter high on the graph, the top of the graph would be 100 meters above the bottom. It turns out that the log display is both easy to understand and shows features which have very different amplitudes clearly.

Of course the analyzer is capable of showing the magnitude on a linear scale if you wish.

The real and imaginary parts are always displayed on a linear scale. This avoids the problem of taking the log of negative voltages.

The PSD and Octave analysis are real quantities and thus may only be displayed as magnitudes. In addition, the Octave analysis requires the display to be Log Magnitude.

Phase
In general, phase measurements are only used when the analyzer is triggered. The phase is relative to the start of the time record.

The phase is displayed in degrees or radians on a linear scale from -180 (-ð) to +180 (+ð) degrees (rads). There is no phase "unwrap".

The phase of a particular frequency bin is set to zero if neither the real nor imaginary part of the FFT is greater than 0.012% of full scale (-78 dB below f.s.). This avoids the messy phase display associated with the noise floor. (Remember, even if a signal is small, its phase extends over the full 360 degrees.)

Watch Out For Phase Errors
The FFT can be thought of as 400 bandpass filters, each centered on a frequency bin. The signal within each filter shows up as the amplitude of each bin. If a signal's frequency is between bins, the filters act to attenuate the signal a little bit. This results in a small amplitude error. The phase error, on the other hand, can be quite large. Because these filters are very steep and selective, they introduce very large phase shifts for signals not exactly on a frequency bin.

On full span, this is generally not a problem. The bins are 250 Hz apart and most synthesized sources have no problem generating a signal right on a frequency bin. But when the span is narrowed, the bins move much closer together and it becomes very hard to place a signal exactly on a frequency bin.

WINDOWING

What is windowing? Let's go back to the time record. What happens if a signal is not exactly periodic within the time record? We said that its amplitude is divided into multiple adjacent frequency bins. This is true but it's actually a bit worse than that. If the time record does not start and stop with the same data value, the signal can actually smear across the entire spectrum. This smearing will also change wildly between records because the amount of mismatch between the starting value and ending value changes with each record.

Windows are functions defined across the time record which are periodic in the time record. They start and stop at zero and are smooth functions in between. When the time record is windowed, its points are multiplied by the window function, time bin by time bin, and the resulting time record is by definition periodic. It may not be identical from record to record, but it will be periodic (zero at each end).

In the frequency domain
In the frequency domain, a window acts like a filter. The amplitude of each frequency bin is determined by centering this filter on each bin and measuring how much of the signal falls within the filter. If the filter is narrow, then only frequencies near the bin will contribute to the bin. A narrow filter is called a selective window - it selects a small range of frequencies around each bin. However, since the filter is narrow, it falls off from center rapidly. This means that even frequencies close to the bin may be attenuated somewhat. If the filter is wide, then frequencies far from the bin will contribute to the bin amplitude but those close by will probably not be attenuated much.

The net result of windowing is to reduce the amount of smearing in the spectrum from signals not exactly periodic with the time record. The different types of windows trade off selectivity, amplitude accuracy, and noise floor.

The SR770 offers four types of window functions - Uniform (none), Flattop, Hanning and Blackman-Harris (BMH).

Uniform
The uniform window is actually no window at all. The time record is used with no weighting. A signal will appear as narrow as a single bin if its frequency is exactly equal to a frequency bin. (It is exactly periodic within the time record). If its frequency is between bins, it will affect every bin of the spectrum. These two cases also have a great deal of amplitude variation between them (up to 4 dB).

In general, this window is only useful when looking at transients which do not fill the entire time record.

Hanning
The Hanning window is the most commonly used window. It has an amplitude variation of about 1.5 dB (for signals between bins) and provides reasonable selectivity. Its filter rolloff is not particularly steep. As a result, the Hanning window can limit the performance of the analyzer when looking at signals close together in frequency and very different in amplitude.

Flattop
The Flattop window improves on the amplitude accuracy of the Hanning window. Its between-bin amplitude variation is about .02 dB. However, the selectivity is a little worse. Unlike the Hanning, the Flattop window has a wide pass band and very steep rolloff on either side. Thus, signals appear wide but do not leak across the whole spectrum.

BMH
The BMH window is a very good window to use with this analyzer. It has better amplitude accuracy (about 0.7 dB) than the Hanning, very good selectivity and the fastest filter rolloff. The filter is steep and narrow and reaches a lower attenuation than the other windows. This allows signals close together in frequency to be distinguished, even when their amplitudes are very different.

If a measurement requires the full dynamic range of the analyzer, then the BMH window is probably the best one to use.

AVERAGING

The SR770 analyzer supports several types of averaging. In general, averaging many spectra together improves the accuracy and repeatability of measurements.

RMS Averaging
RMS averaging computes the weighted mean of the sum of the squared magnitudes (FFT times its complex conjugate). The weighting is either linear or exponential.

RMS averaging reduces fluctuations in the data but does not reduce the actual noise floor. With a sufficient number of averages, a very good approximation of the actual random noise floor can be displayed.

Since RMS averaging involves magnitudes only, displaying the real or imaginary part or phase of an RMS average has no meaning. The RMS average has no complex information.

Vector Averaging
Vector averaging averages the complex FFT spectrum. (The real part is averaged separately from the imaginary part.) This can reduce the noise floor for random signals since they are not phase coherent from time record to time record.

Vector averaging requires a trigger. The signal of interest must be both periodic and phase synchronous with the trigger. Otherwise, the real and imaginary parts of the signal will not add in phase and instead will cancel randomly.

With vector averaging, the real and imaginary parts as well as phase displays are correctly averaged and displayed. This is because the complex information is preserved.

Peak Hold
Peak Hold is not really averaging, rather the new spectral magnitudes are compared to the previous data, and if the new data is larger, then the new data is stored. This is done on a frequency bin by bin basis. The resulting display shows the peak magnitudes which occurred in the previous group of spectra.

Peak Hold detects the peaks in the spectral magnitudes and only applies to Spectrum, PSD, and Octave Analysis measurements. However, the peak magnitude values are stored in the original complex form. If the real or imaginary part or phase is being displayed for spectrum measurements, the display shows the real or imaginary part or phase of the complex peak value.

Linear Averaging
Linear averaging combines N (number of averages) spectra with equal weighting in either RMS, Vector or Peak Hold fashion. When the number of averages has been completed, the analyzer stops and a beep is sounded. When linear averaging is in progress, the number of averages completed is continuously displayed below the Averaging indicator at the bottom of the screen.

Auto ranging is temporarily disabled when a linear average is in progress. Be sure that you don't change the input range manually either. Changing the range during a linear average invalidates the results.

Exponential Averaging
Exponential averaging weights new data more than old data. Averaging takes place according to the formula,

$$\text{Average}_N = (\text{New Spectrum} \cdot 1/N) + (\text{Average}_{N-1}) \cdot (N-1)/N$$

where N is the number of averages.

Exponential averages "grow" for approximately the first 5N spectra until the steady state values are reached. Once in steady state, further changes in the spectra are detected only if they last sufficiently long. Make sure that the number of averages is not so large as to eliminate the changes in the data that might be important.

REAL TIME BANDWIDTH AND OVERLAP PROCESSING

What is real time bandwidth? Simply stated, it is the frequency span whose corresponding time record exceeds the time it takes to compute the spectrum. At this span and below, it is possible to compute the spectra for every time record with no loss of data. The spectra are computed in "real time". At larger spans, some data samples will be lost while the FFT computations are in progress.

For all frequency spans, the SR770 can compute the FFT in less time than it takes to acquire the time record. Thus, the real time bandwidth of the SR770 is 100 kHz. This includes the real time digital filtering and heterodyning, the FFT processing, and averaging calculations. The SR770 employs two digital signal processors to accomplish this. The first collects the input samples, filters and heterodynes them, and stores a time record. The second computes the FFT and averages the spectra. Since both processors are working simultaneously, no data is ever lost.

Averaging speed

How can you take advantage of this?Consider averaging. Other analyzers typically have a real time bandwidth of around 4 kHz. This means that even though the time record at 100 kHz span is only 4 ms, the "effective" time record is 25 times longer due to processing overhead. An analyzer with 4 kHz of real time bandwidth can only process about 10 spectra a second. When averaging is on, this usually slows down to about 5 spectra per second. At this rate it's going to take a couple of minutes to do 500 averages.

The SR770, on the other hand, has a real time bandwidth of 100 kHz. At a 100 kHz span, the analyzer is capable of processing 250 spectra per second. In fact, this is so fast, that the display can not be updated for each new spectra. The display only updates about 6 times a second. However, when averaging is on, all of the computed spectra will contribute to the average. The time it takes to complete 500 averages is only a few seconds. (Instead of a few minutes!)

Overlap

What about narrow spans where the time record is long compared to the processing time? The analyzer computes one FFT per time record and can wait until the next time record is complete before computing the next FFT. The update rate would be no faster than one spectra per time record. With narrow spans, this could be quite slow.

And what is the processor doing while it waits? Nothing. With overlap processing, the analyzer does not wait for the next complete time record before computing the next FFT. Instead it uses data from the previous time record as well as data from the current time record to compute the next FFT. This speeds up the processing rate. Remember, most window functions are zero at the start and end of the time record. Thus, the points at the ends of the time record do not contribute much to the FFT. With overlap, these points are "re-used" and appear as middle points in other time records. This is why overlap effectively speeds up averaging and smoothes out window variations.

Typically, time records with 50% overlap provide almost as much noise reduction as non-overlapping time records when RMS averaging is used. When RMS averaging narrow spans, this can reduce the measurement time by 2.

Overlap percentage

The amount of overlap is specified as a percentage of the time record. 0% is no overlap and 99.8% is the maximum (511 out of 512 samples re-used). The maximum overlap is determined by the amount of time it takes to calculate an FFT and the length of the time record and thus varies according to the span.

The SR770 always tries to use the maximum amount of overlap possible. This keeps the display updating as fast as possible. Whenever a new frequency span is selected, the overlap is set to the maximum possible value for that span. If less overlap is desired, then use the Average menu to enter a smaller value. On the widest spans (25, 50 and 100 kHz), no overlap is allowed.

Triggering

If the measurement is triggered, then overlap is ignored. Time records start with the trigger. The analyzer must be in continuous trigger mode to use overlap processing.

INPUT RANGE

The input range on the SR770 varies from a maximum of 34 dBV full scale to a minimum of -60 dBV full scale. A signal which exceeds the current input range will cause the OvrLoad message to appear at the bottom of the screen. A signal which exceeds the maximum safe range will turn on the HI V indicator.

The input range is displayed in dBV. The maximum and minimum range equivalents are tabulated below.

Max	34 dBVpk
	31 dBVrms
	50.1 Vpk
	35.4 Vrms
Min	-60 dBVpk
	-63 dBVrms
	1.0 mVpk
	0.7 mVrms

Manual Range
The input range can be specified in the Input menu to be fixed at a certain value. Signals that exceed the range will overload and become distorted. Signals which fall to a small percentage of the range will become hard to see.

Auto Range
The input range can be set to automatically correct for signal overloads. When autoranging is on and an overload occurs, the input range is adjusted so that the signal no longer overloads. If the signal decreases, the input range is not adjusted. You must take care to ensure that the signal does not fall dramatically after pushing the input range to a very insensitive setting.

While the analyzer is performing linear averaging, the input range is NOT changed even if the signal overloads. The overload indicator will still light to indicate an over range condition. Changing the range during a linear average invalidates the average.

THE SOURCE

The SR770 source provides a variety of test signals which allow the SR770 to measure the response of electronic, mechanical and acoustic devices, without the need for an external generator. In many cases, the SR770 source is better than an external source since it is synchronous with the input sampling.

Sine
A low distortion sine wave for general purpose gain, distortion and signal/noise measurements. The sine source is synchronous with the FFT, i.e. sine waves can be generated at exact bin frequencies of the FFT. This can eliminate windowing effects in the measured amplitude and phase.

Two Tone
Two low distortion sine waves can be generated simultaneously for intermodulation distortion tests (IMD). Each tone has independent frequency and amplitude settings.

Chirp
The Chirp source provides an equal amplitude sine wave at each bin of the displayed spectrum. Since there are 400 bins in a spectrum, the chirp is the sum of 400 discrete sine waves. The phases of each sine wave are arranged so that they do not add in phase and the resulting output does not peak. This source is useful for measuring transfer functions quickly without having to make many discrete measurements using a single sine wave.

The Source Cal mode compensates for the ripple in the output filter by adjusting the input calibrations. This results in a flat chirp spectrum. Inserting a device under test will measure the device's amplitude transfer curve.

Windowing
The Sine, Two Tone, and Chirp sources can be used with or without a window function.

The sine and two tone frequencies can be set at exact bin frequencies of the spectrum, hence they can be exactly periodic in the time record. As long as the signal to noise at the input if high, windowing is not required.

The chirp waveform consists of 400 sine waves, each one perfectly periodic in the time record. The chirp waveform requires a uniform window to result in a flat spectrum. This is because the individual frequency components do not have a constant amplitude over the time record. Windowing will attenuate certain portions of the spectrum.

Source Trigger
The Sine, Two Tone, and Chirp sources can be triggered to measure phase response and/or vector average. The Source Trigger mode simply sets the overlap to 0% so each time record follows immediately after the previous one with no delay.

For the chirp source, each time record will be identical so the phase of each component will be stable. The absolute phase of the record is arbitrary since the source does not turn on and off synchronously with the input time record. Turning on and off the source, changing the span, performing Auto Offset can all change the absolute phase of the time record. The Auto Phase function can be used to set all the phase of each component to zero. Subsequent phase measurements will be relative to zero.

For sine and two tone, the source frequencies must be set to a multiple of the linewidth in order for a stable time records to be acquired. Random frequencies are not exactly periodic over a time record and do not result in a stable phase. Once again, the absolute phase is arbitrary since the source does not turn on synchronously with the input time record.

Noise
Broadband noise is useful for characterizing circuits, mechanical systems or even the audio response of an entire room. White noise provides equal amplitude per root Hz from 0 to 100 kHz, regardless of the measurement span. White noise is useful in electronic applications. Pink noise rolls off at 3 dB/oct providing equal amplitude per octave. Pink noise is preferred in audio applications.

Since the signal is noisy and random, windows are always required when using the noise source.

Source triggering is not meaningful since there is no stable phase information in the source.

FRONT PANEL OVERVIEW

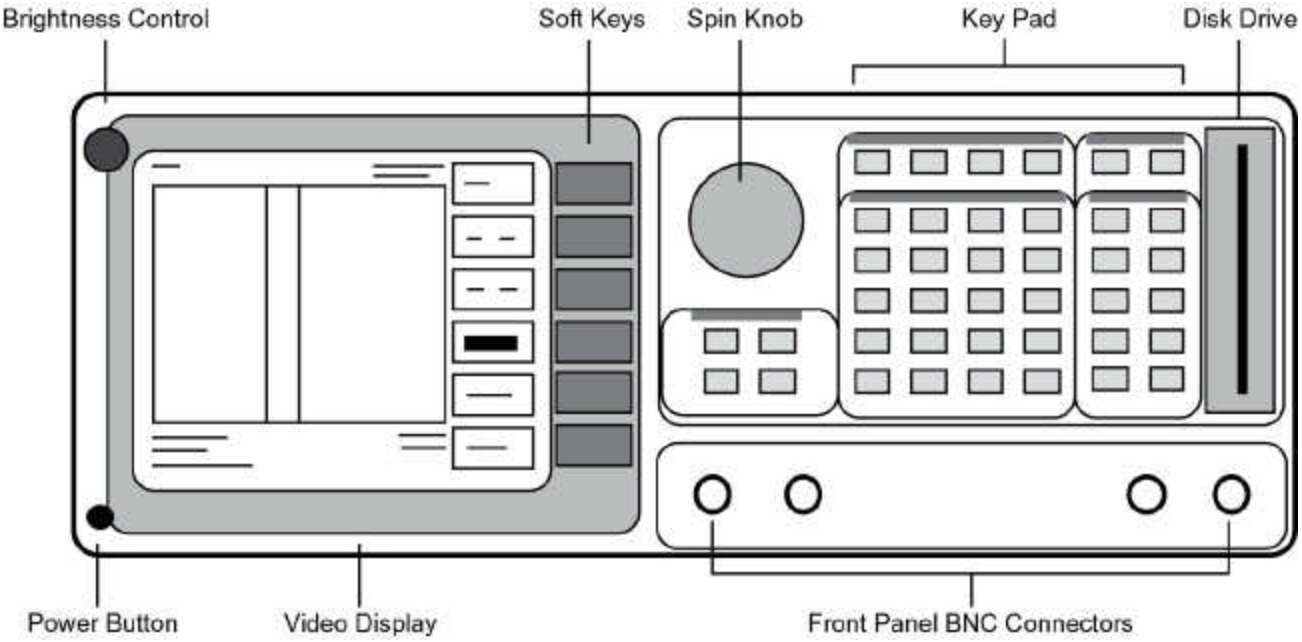

POWER BUTTON

The SR770 is turned on by pushing in the POWER button. The video display may take a few seconds to warm up and become visible. Adjust the brightness until the screen is easily readable.The model, firmware version and serial number of the unit are displayed when the power is turned on.

A series of internal tests are performed at this point. Each test is described as it is performed and the results are represented graphically as OK or NOT OK. The tests are described below.

RAM This test performs a read/write test to the processor RAM. In addition, the nonvolatile backup memory is tested. All instrument settings are stored in nonvolatile memory and are retained when the power is turned off. If the memory check passes, then the instrument returns to the settings in effect when the power was last turned off. If there is a memory error, then the stored settings are lost and the default settings are used.

ROM This test checks the processor ROM.

CLR This test indicates whether the unit is being reset. To reset the unit, hold down the backspace [<-] key while the power is turned on. The unit will use the default settings. The default setup is listed in a later chapter.

CLK This test checks the CMOS clock and calendar for a valid date and time. If the there is an error, the time will be reset to a default time. Change the clock settings using the SYSTEM SETUP menu.

DSP This test checks the digital signal processors and fast memory.

A/D This test checks the analog to digital converter board.

RESET

Holding down the backspace [<-] key while the power is turned on resets the unit. The unit will use the default settings as listed at the end of the Menus section of the manual.

VIDEO DISPLAY

The monochrome video display is the user interface for data display and front panel programming operations. The resolution of the display is 640H by

480V. The brightness is adjusted using the brightness control knob located at the upper left corner. As with most video displays, do not set the brightness higher than necessary. The display may be adjusted left and right using the Setup Screen function in the SYSTEM SETUP menu.

A complete description of the screen display follows in the next section.

SOFT KEYS

The SR770 has a menu driven user interface. The 6 soft keys to the right of the video display have different functions depending upon the information displayed in the menu boxes at the right of the video display. In general, the soft keys have two uses. The first is to toggle a feature on and off or to choose between settings. The second is to highlight a parameter which is then changed using the spin knob or numeric keypad. In both cases, the soft keys affect the parameters which are displayed adjacent to them.

KEYPAD

The keypad consists of five groups of keys. The ENTRY keys are used to enter numeric parameters which have been highlighted by a soft key. The MENU keys select a menu of soft keys. Pressing a menu key will change the menu boxes which are displayed next to the soft keys. Each menu presents a group of similar parameters and functions. The CONTROL keys start and stop actual data acquisition, select the marker and toggle the active trace. These keys are not in a menu since they are used frequently and while displaying any menu. The SYSTEM keys print the screen to a printer and display help messages. Once again, these keys can be accessed from any menu. The MARKER keys determine the marker mode and perform various marker functions. The marker functions can be accessed from any menu.

A complete description of the keys follows in the next section.

SPIN KNOB

The spin knob is used to adjust parameters which have been highlighted using the soft keys. Most numeric entry fields may be adjusted using the knob. In addition, functions such as display zooming and scrolling use the knob as well. In these cases, the knob function is selected by the soft keys. The [MARKER] key, which can be pressed at any time, will set the knob function to scrolling the marker.

DISK DRIVE

The 3.5" disk drive is used to store data and instrument settings. Double sided, double density disks should be used. The disk capacity is 720k bytes formatted. The disk format is DOS compatible. Disks written by the SR770 may be read by PC compatible computers equipped with a 3.5" drive and DOS 3.0 or higher.

Only use double sided double density (DS/DD) disks. Do not use high density (DS/HD) disks.

BNC CONNECTORS

TRIGGER

The rising or falling edge of the TRIGGER input triggers a time record. The input impedance is 10 K□ and the minimum pulse width is 10 ns. The trigger level is adjustable from -5V to +5V with either positive or negative slope. The minimum pulse amplitude is 100 mV.

SIGNAL INPUTS

The input mode may be single-ended, A, or differential, A-B. The A and B inputs are voltage inputs with 1 M□, 15 pF input impedance. Their connector shields are isolated from the chassis by 1 M□ (float) or 50 □ (ground). Do not apply more than 50 V to either input. The shields should never exceed 3V.

SOURCE OUTPUT

The source can output either sine, two tone, chirp or noise waveforms. The output impedance is less than 5 □ and is capable of driving a 50 □ load. The output is ground referenced.

SCREEN DISPLAY

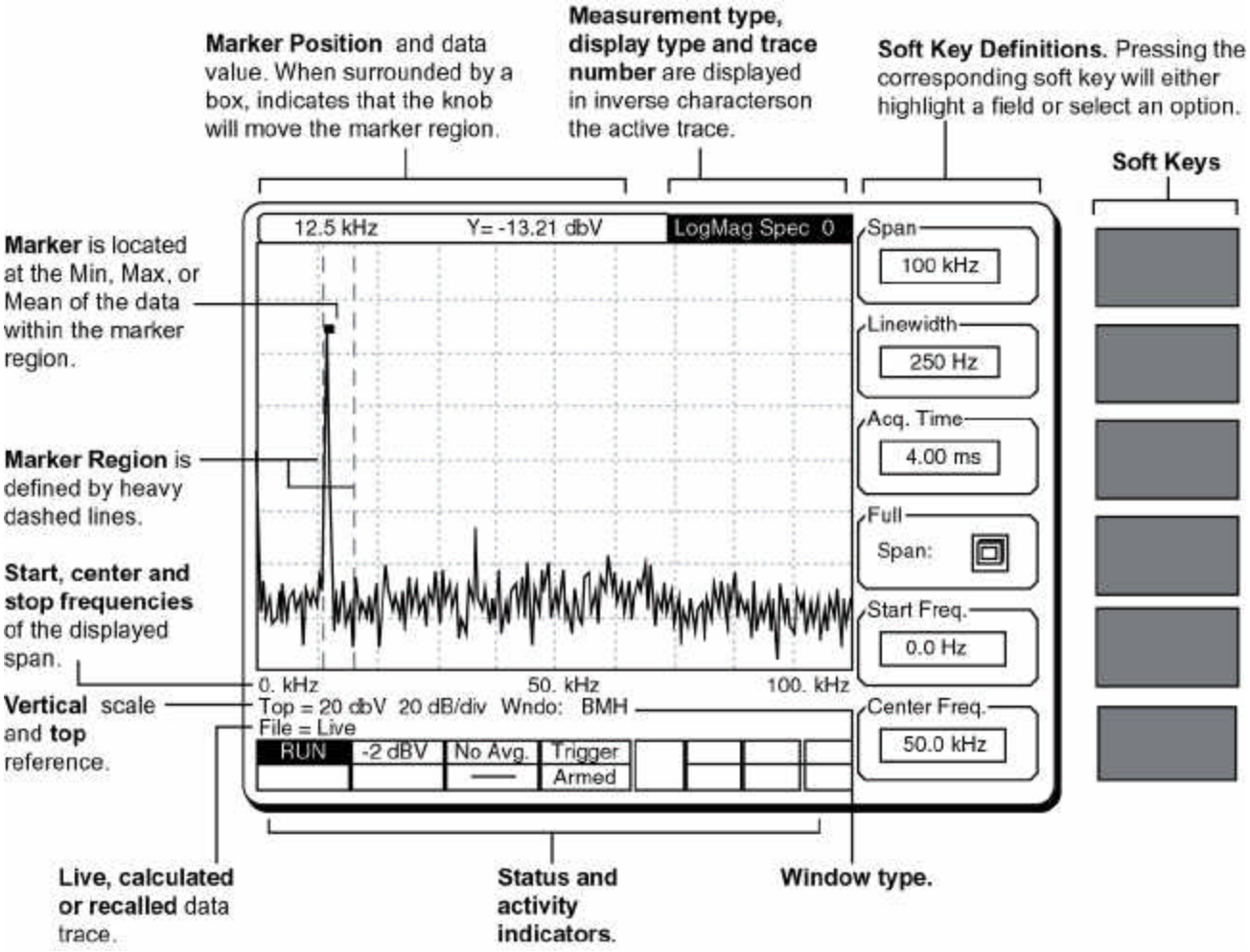

DATA DISPLAY

Data is graphed with signal on the Y axis and frequency or time on the X axis. The physical size of the graph remains constant while the vertical and horizontal scales may be changed. The graph area has a dotted grid for reference. There are 10 horizontal divisions and either 8 or 10 vertical divisions. The frequency span consists of 400 frequency bins. The display normally shows all 400 bins. The X axis may be expanded and translated to display less than 400 bins. This expansion does not change the span or time record, it merely changes the display of the data.

SINGLE and DUAL TRACE DISPLAYS

There are two data traces being acquired at all times. The traces are labelled Trace0 and Trace1. The traces may be different measurements, such as spectrum and time record, or different displays, such as magnitude and phase. When the two traces are displaying live data, they have the same signal input, frequency span, window function, trigger, and averaging mode. If one of the traces is a recalled file, then it can have a span and window which differs from the live settings.

The display shown above is the SINGLE trace format. The [ACTIVE TRACE] key toggles the display between the two traces.

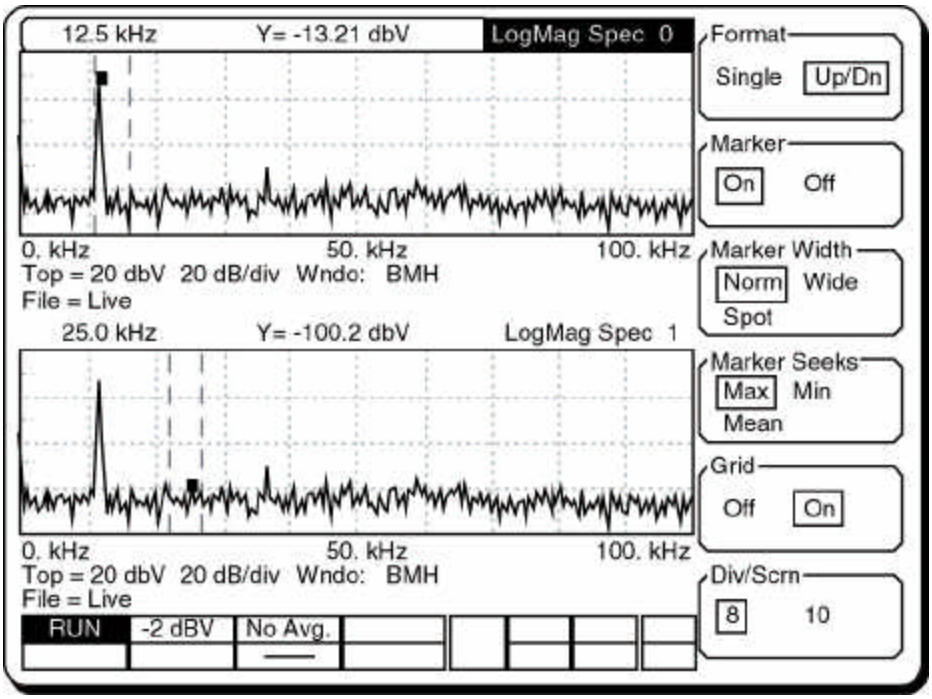

The dual trace or Up/Dn format is shown above. The display format is selected in the DISPLAY menu. Trace0 is always the upper trace. Each trace is annotated the same way as the single trace.

The left edge, center and right edge of the graph are labelled directly below the graph. When displaying spectral data with no horizontal expansion, these values are **the Start, Center and Stop frequencies** of the frequency span in use. When displaying time records, these values are the **Start, Middle and End of the time record**. These times are always relative to the start of the time record, they do not reflect any trigger delay which may be programmed.

To expand a graph, use the SCALE menu. When the display is expanded in the horizontal axis, the labels reflect the displayed span and time, not the actual acquisition span and time record. Expanded traces have an EXPAND indicator below the right hand edge of the graph as shown below.

The **Top reference** is the Y value of the upper edge of the graph. The units can be Volts, dBVolts, or EU (user defined engineering units). The **Vertical** scale is shown as the number of dB, Volts, or EU per division. This value is changed whenever the vertical scale is adjusted.

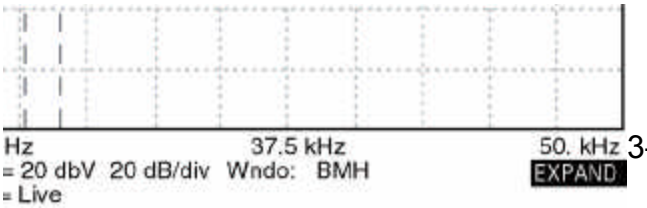

The **Window Function** for the displayed data is shown below the graph. In the case of a recalled graph, this window is the one used to calculate the recalled graph, not the window used for live calculations.

The **File Type** refers to the source of the data being displayed. **Live** means that the data is real-time, **Calc**ulated data is the result of Trace Math, and a "**filename**" is data recalled from a disk file.

At the upper right, the **measurement and display type** and **trace number**, 0 or 1, are shown. The measurement type can be **Spec**trum, **PSD** (power spectral density), **Time** record, or **Octave** analysis. The display types **are Log Mag**nitude, **Lin**ear **Mag**nitude, linear **Real** part, linear **Imag**inary part, and **Phase**.

On the active trace, the measurement type and trace number are highlighted in inverse.

MARKER DISPLAY

The **Marker Region** is the graph region between the two heavy vertical dashed lines. The marker region may be set to 1 division (wide), 1/2 division (norm), or a single vertical line (spot). The marker region does not change with horizontal scaling. The **Marker** is a small square which seeks the minimum, maximum, or mean of the data within the marker region. When seeking min or max, the marker is located at the position of the data point which is the min or max. This allows peaks and valleys in the data to be easily read out. When seeking the mean, the X position of the marker is at the center of the marker region and the Y position is the mean of the data within the region. When a spot marker region is used, the marker is confined to a single frequency or time bin.

The **Marker Position** displays the X position (frequency or time) and the Y data of the marker. Pressing the [MARKER] key will draw a box around the marker information. When the marker readout is surrounded by this box, the spin knob adjusts the position of the marker region. The marker region moves in increments of one frequency or time bin.

MENU DISPLAY

The **Soft Key** menu boxes define the functions of the 6 soft keys to the right of the screen. The menu boxes are grouped into menus. Pressing each of the ten Menu keys will display a different menu of boxes. Related functions are grouped into a single menu. In general, pressing a soft key does one of two things. One is to toggle between 2 or 3 specific choices. An example is the Display Format box illustrated on the previous page. Pressing the first soft key toggles the display between Single and Up/Dn. The second soft key mode is to highlight an entry field and knob function. An example would be the Start Freq. Pressing the soft key will highlight the Start Freq. value. The Start Freq. may then be adjusted with the knob or entered as a value using the numeric entry keys. Each menu is described at length in a following section.

STATUS INDICATORS

In addition to the data display and menu boxes, there are a number of status indicators which are displayed at the bottom of the screen.

RUN/STOP/STOP-Invld
The RUN indicator is on whenever data is being taken and spectra are being calculated. STOP indicates that data is not being acquired and the data display is not being updated. STOP-Invld means that the data on the display may not match the graph parameters or the analyzer settings. For example, if the display is paused (using the [PAUSE CONT] key or some other means), and the span is changed, clearly the displayed data does not reflect the new span. In this case, the STOP-Invld indicator will turn on.

SETTLING
When changing between narrow frequency spans with long acquisition times, the digital filter requires some settling time before all of the data is replaced with new data. This time is longer than the record time. While this indicator is on, the filter is still settling and the displayed spectrum may not be accurate.

Input Range
The input range is always displayed. If the range is set manually, the display is in normal characters. If Auto Range is on, then inverse characters are used.

OvrLoad
This indicator turns on if the input signal overloads the analog amplifier or A/D converter.

No Avg./Avrging
This indicates whether averaging is in effect. Averaging affects both traces if they are live. If linear averaging is on, then the number below the **Avrging** indicator is the number of averages accumulated so far. If averaging is off or exponential, then no number is displayed.

Trigger/Trg Wait
If triggering is on, then the **Trigger** indicator flashes on whenever a time record is triggered. **Trg Wait** indicates that the unit is in triggered mode and is waiting for a trigger to occur. Triggers received while acquiring data from a previous trigger are ignored.

Armed/Arm Wait
If triggering is on, the **Armed** indicator is on whenever the unit is armed and awaiting a trigger. **Arm Wait** means that the unit is in manual arming

mode and awaiting an arm command, either from the front panel or via the computer interfaces.

GPIB/RS232
Flashes when there is activity on the computer interfaces. This does not flash for printer or plotter activity.

SRQ
This indicator is on whenever a GPIB Service Request is generated by the SR770. SRQ stays on until a serial poll is completed.

REM
This indicator is on when the front panel is locked out by a computer interface. No front panel adjustments may be made. To return the unit to local control (if allowed), press the [HELP] key.

Pass/Fail
This indicates whether a trace passes or fails a limit table test.

ERR
Flashes whenever there is a computer interface error such as illegal command or out of range parameter is received. This does not flash for a printer or plotter error.

HV
The High Voltage indicator turns on whenever an input greater than 50 V is detected. The analyzer immediately switches in an attenuator to protect the input circuitry. Any attempt to set the input range to a setting which would remove this attenuator will not be allowed until the input signal is reduced to a safe level.

ALT
Indicates that the ALTERNATE keypad is in use. The ALTERNATE keypad uses the alphabetic legends printed below each key. To enter the ALT mode, press the [ALT] key once. Pressing the keys will now enter alphabetic characters into the active entry field. The [0]...[9], [.], [-], [<-] and [ALT] have the same function in the ALTERNATE keypad. To return to the normal keypad, press the [ALT] key again.

KEYPAD

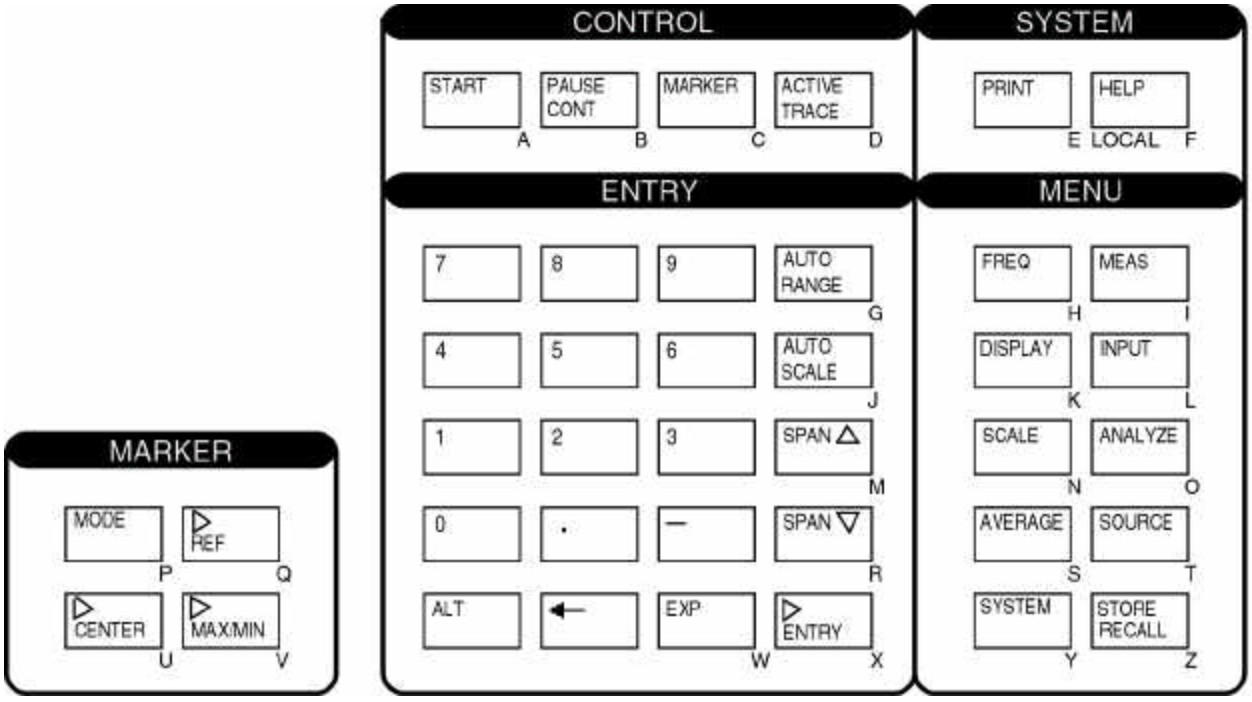

NORMAL AND ALTERNATE KEYS

The normal key definitions are printed on each key. In addition, each key also has an alternate definition printed below it. The [ALT] key toggles the keypad between the two definitions. The ALT screen indicator is on when the alternate definitions are in use. The [0]...[9], [.], [-], [<-] and [ALT] keys have the same definition in both modes. The alternate keys should only be used when accessing files on the disk drive or labelling plots.

MENU KEYS

All operating parameters of the SR770 are grouped into ten function menus. The ten menu keys select which menu of parameters is displayed next to the six soft keys. The soft keys then either toggle a parameter, highlight a parameter entry field (for numeric entry or knob adjustment), or display a submenu. The menus are listed below.

[FREQ] Sets the frequency span and start and center frequencies.

[MEAS] Displays submenus for selecting the measurement type, displayed quantity, units, window type, and calculator.

[DISPLAY] Sets the display format, marker on/off, and grid modes.

[INPUT] Configures the signal inputs, sets the manual input range and trigger setup.

[SCALE] Sets the graph scaling and expansion and selects linear or log X axis.

[ANALYZE] Turns on harmonic, sideband and band analysis as well as data and limit tables.

[AVERAGE] Turns averaging on and off and selects the averaging type.

[SOURCE] Turns on and off and configures built-in source.

[SYSTEM] Configures the computer interfaces, sound, real time clock, plotter, printer, and screen

location. The [TEST] submenu tests the keypad, external keyboard, knob, RS232 interface, printer interface, disk drive, video screen, and memory. The [INFO] submenu displays various information screens.

[STORE RECALL]

This menu stores and recalls data and settings to and from the disk. Also contains a disk utilities submenu.

Detailed descriptions of each menu are provided in a later chapter.

ENTRY KEYS

The numeric entry keys can be used to directly enter parameter values. Parameters may be entered only if their menu box is displayed and their entry field is highlighted. For example, if the FREQ menu is displayed, the fifth soft key is next to the Start Freq. box. Pressing this soft key will highlight the entry field displaying the start frequency. The menu box will appear as below.

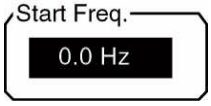

A new start frequency may now be entered using the numeric keys. For example, to set the start to -1.25 kHz, press [1] [.] [2] [5]. As soon as the [1] is pressed, the entry parameter is displayed in the upper left hand corner of the screen as shown below.

Note that the frequency menu is also replaced with a units menu. This menu shows the available units for the active entry field, in this case mHz, Hz, or kHz.

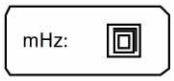

The entry field displays the characters as the keys are pressed. The '-' is the entry point. If an error is made, the backspace [<-] key will erase the last character. Pressing the Escape soft key will abort the entry operation and leave the value unchanged. When the entry string is correct, press the kHz units soft key to change the start frequency to the new value.

Entries may be made in exponential form using the [EXP] key. The entry above may be made by pressing [1] [2] [5] [EXP] [1] and then the Hz units soft key.

In general, whenever a parameter entry field is highlighted, the knob may also be used to adjust the value. If the knob is turned while making a numeric entry but before a units key has been pressed, the knob will adjust the marker position instead.

Some entry fields allow only knob adjustment or only numeric entry.

START and PAUSE/CONT

The [START] and [PAUSE/CONT] keys are used to start, pause and continue data acquisition. If the unit is in the RUN mode acquiring and displaying data, as indicated by the RUN indicator, then the [PAUSE/CONT] key will halt data acquisition. The RUN indicator switches to STOP and no new spectra will be taken and the display will not be updated. If averaging is off, then either the [START] key or the [PAUSE/CONT] key will resume acquisition. If averaging is on, the [START] key will reset the average and restart acquisition. [PAUSE/CONT], on the other hand, will continue the average where it was paused. In the case of linear averaging when the average is already completed, the [PAUSE/CONT] does nothing since there is no average to continue.

MARKER

Pressing the [MARKER] key highlights the marker information field by drawing a box around it. The knob will now scroll the marker region. The highlighted marker field appears below.

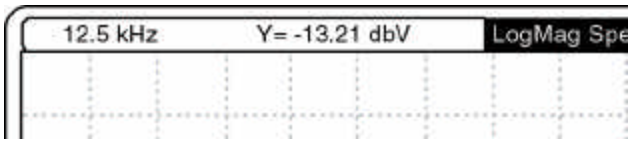

Any previously highlighted parameter field will become non-highlighted. Pressing a soft key to highlight a new parameter field will let the knob adjust the new parameter while the marker becomes unselected.

ACTIVE TRACE

Pressing [ACTIVE TRACE] toggles the active trace. In the single trace display format, the graph switches between Trace0 and Trace1. In the dual screen display, [ACTIVE TRACE] switches which trace is active as indicated by the highlighted trace identification at the upper right of the graph. In both cases, the active trace determines which trace's parameters are displayed in the menus. For example, activating Trace0 and then selecting the Measure menu will allow you to select the measurement for Trace0. Pressing [ACTIVE TRACE] once allows you to select the measurement for Trace1 using the same menu. Only those parameters which are associated with an individual trace have differing values between the traces. Parameters such as input configuration, frequency span and window function are the same for any live trace.

AUTO RANGE

Pressing [AUTO RANGE] toggles the input ranging mode between Manual and Auto. In Manual mode, the input range is set within the INPUT menu. When the mode is toggled to Auto, the input range is stepped quickly from -60 dB towards +30 dB until no overload is detected. Any overload in the signal will cause the input scale to change to remove the overload. If the signal decreases, the input scale is not changed. The range can be autoranged at any time by toggling the mode from Auto to Manual and back to Auto. Switching back to Manual ranging leaves the input range at the current setting.

The Input Range indicator will be in inverse characters if Auto Ranging is on.

AUTOSCALE

Pressing [AUTOSCALE] will automatically set the vertical scale and translation to display the entire range of the data. [AUTOSCALE] does not affect the horizontal scaling.

[AUTOSCALE] may be pressed at any time during or after data acquisition.

[AUTOSCALE] only operates on the data which is displayed on the graph. If the graph is expanded, data corresponding to frequency or time bins which are not shown do not figure in the autoscaling calculations.

SPAN UP and SPAN DOWN

The [SPAN UP] and [SPAN DOWN] keys increment and decrement the frequency span by a factor of 2. These keys provide a way of adjusting the span when any menu is displayed. The span is adjusted with either a fixed start or fixed center frequency depending upon which frequency field was most recently activated in the FREQ menu.

MARKER ENTRY

In the ANALYZE menu, pressing this key will enter the marker frequency into the Fundamental (Harmonic analysis), Carrier (sideband analysis), Band Start and Center (band analysis) frequency fields. This key also enters the marker frequency into the X Value field of the Data and Limit Tables.

MARKER MODE

The [MODE] key in the MARKER section of the keypad brings up a menu. This menu selects linked cursors in the dual trace display and allows marker offsets to be entered manually. The Peak find functions are also in this menu.

MARKER REF

The [MARKER REF] key toggles the marker offset or reference mode. Pressing this key once will turn on the marker offset and set the X and Y offset to the value of the current marker position. Subsequent marker readings are relative to the reference or offset values. The offset marker is indicated by a □ (delta symbol) preceding the marker readout above the graph as shown below. The [MARKER REF] key may be used in any menu.

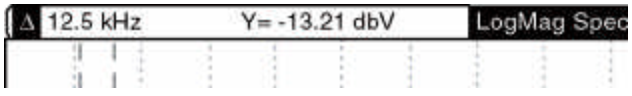

The marker offset location on the graph is marked by a small star shaped symbol.

MARKER CENTER

The [MARKER CENTER] key sets the span center frequency to the marker frequency. If the span is large so that this operation would require a span which extends below 0 Hz or past 100 kHz, then the span is decreased to the largest span which allows the marker frequency to be the center.

In addition, the [MARKER CENTER] key has the same effect as the [MARKER] key. The marker display is highlighted and the knob will adjust the marker position.

MARKER MAX/MIN

Pressing [MARKER MAX/MIN] will center the marker region around the maximum or minimum data value on the screen. The Marker Seeks mode in the DISPLAY menu chooses whether this key finds the on-screen max or min. If the marker seeks the mean, then the [MARKER MAX/MIN] key finds the maximum on-screen point. The marker will be positioned at the Min, Max, or Mean of the data within the region, depending upon the seeks mode. The [MARKER MAX/MIN] key only searches the data which is on the screen. If the max/min value occurs at more than one location, then the one closest to the left edge is found.

PRINT

[PRINT] will print the currently displayed screen to a printer attached to the rear panel parallel printer port. The entire screen, including text and menus, is printed. The time and date will also be printed. The printer type needs to be configured in the SYSTEM SETUP menu before using [PRINT]. A "Printing in Progress" message will appear on the screen while printing occurs.

Pressing [<-] (backspace) will abort the printout. No other front panel operations may be performed until printing is completed. If no printer is attached or there is a printer error, then the print operation is aborted after about 10 seconds. A "Print Aborted!" message will appear briefly on the screen.

HELP

[HELP] provides on screen help with any key or soft key. Pressing [HELP] followed by any key will display information about the function or use of that key. [HELP] with a soft key will describe the menu item next to the soft key. Pressing another key will exit the help screen.

The [PRINT] key is the one key for which no help is available. Pressing [PRINT] at any time will print the screen, including the help screens.

LOCAL

When a host computer places the unit in the REMOTE state, no keypad or knob input is allowed. To return to front panel operation, press the [HELP] key.

REAR PANEL

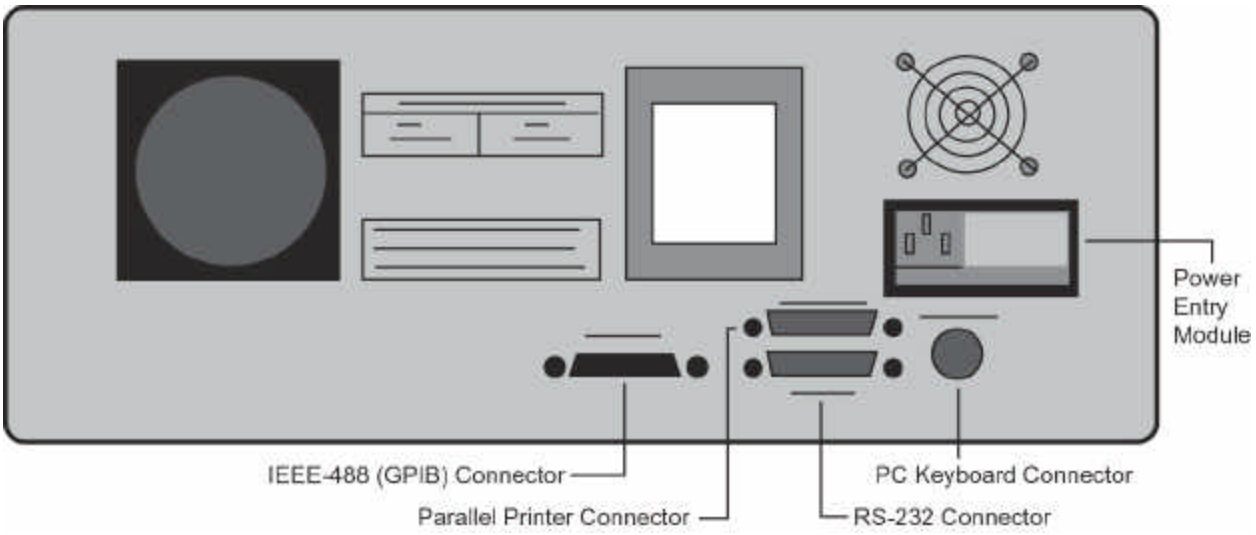

POWER ENTRY MODULE

The power entry module is used to fuse the AC line, select the line voltage, and block high frequency noise from entering or exiting the instrument. Refer to the first page of this manual for instructions on selecting the correct line voltage and fuse.

IEEE-488 CONNECTOR

The 24 pin IEEE-488 connector allows a computer to control the SR770 via the IEEE-488 (GPIB) instrument bus. The address of the instrument is set in the SETUP GPIB menu.

Also, a GPIB plotter with HPGL compatible graphics may be connected to the IEEE-488 port. In this case, the SR770 will control the plotter to generate plots of the screen graph. Use the SETUP PLOTTER menu to configure the SR770 for use with a GPIB plotter.

RS232 CONNECTOR

The RS232 interface connector is configured as a DCE (transmit on pin 3, receive on pin 2). The baud rate, parity, and word length are programmed from the SETUP RS232 menu. To connect the SR770 to a PC serial adapter, which is usually a DTE, use a straight thru serial cable.

Also, a serial plotter with HPGL compatible graphics may be connected to the RS232 port. The SR770 will drive the plotter to generate plots of the screen graph. Use the SETUP PLOTTER menu to configure the SR770 for use with a serial plotter.

PARALLEL PRINTER CONNECTOR

The [PRINT] key will print the screen to an Epson compatible graphics printer or an HP LaserJet compatible laser printer. Use a standard printer cable to attach the printer to the printer port. Use the SETUP PRINTER menu to choose the type of printer.

PC KEYBOARD CONNECTOR

An IBM PC or XT compatible keyboard may be attached to the keyboard connector. An AT keyboard may be in its PC or 8088 mode. Typing at the attached keyboard is the same as entering numbers and letters from the front panel keypad. Highlighted parameter entry fields will accept characters from the keyboard. Typing 'E' or 'e' is the same as [EXP]. In general, the keyboard is only useful for alphabetic fields such as file names or plot labels.

Frequency

The Frequency menu is used to set the frequency span and location for the measurement.

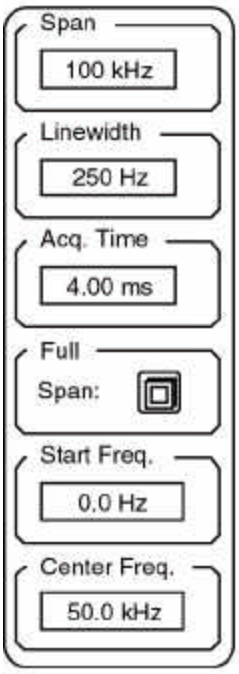

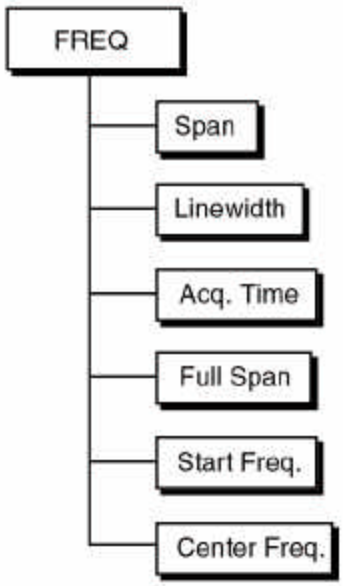

Span

Pressing the Span key selects the frequency span as the active entry field. A new span may be entered from the numeric keypad or the knob may be used to adjust the span. The frequency span ranges from 191 mHz to 100 kHz in factors of 2. A numerically entered span is rounded up to the next largest allowable span.

If the new span is incompatible with the 0 to 100 kHz frequency range because the start or center frequency is close to the limits of the range, then the start or center frequency will be adjusted to accommodate the new span.

Changing the span will change the Linewidth (Span/400) and Acquisition Time (400/Span).

Linewidth

The Linewidth key selects the linewidth as the active entry field. The linewidth is defined as the span divided by 400. The linewidth ranges from .477 mHz to 250 Hz in factors of 2. A numerically entered linewidth is rounded up to the next largest allowable linewidth.

Changing the linewidth will change the Span (Linewidth*400) and Acquisition Time (1/Linewidth). If the new span is incompatible with the 0 to 100 kHz frequency range because the start or center frequency is close to the limits of the range, then the start or center frequency will be adjusted to accommodate the new span.

Acquisition Time

The Acquisition Time key selects the acquisition time as the active entry field. The acquisition time is defined as the reciprocal of the linewidth. The

acquisition time ranges from 2097.1 s to 4.00 ms in factors of 2. A numerically entered acquisition time is rounded down to the next fastest allowable acquisition time.

Changing the acquisition time will change the Span (400/Acquisition Time) and Linewidth (1/Acquisition Time). If the new span is incompatible with the 0 to 100 kHz frequency range because the start or center frequency is close to the limits of the range, then the start or center frequency will be adjusted to accommodate the new span.

Full Span

Pressing this key immediately sets the Span to 100 kHz, Linewidth to 250 Hz, Acquisition Time to 4.00 ms, Start Frequency to 0.0 Hz, and Center Frequency to 50.0 kHz.

Start Frequency

The Start Frequency key selects the start frequency of the span as the active entry field. The knob adjusts the start frequency in steps equal to the linewidth. A numerically entered frequency is rounded to the nearest frequency bin (exact multiple of the linewidth). If the new start frequency is incompatible with the span because of the 0 to 100 kHz range limits, then the start frequency will be set to the closest allowable value.

Center Frequency

The Center Frequency key selects the center frequency of the span as the active entry field. The knob adjusts the center frequency in steps equal to the linewidth. A numerically entered frequency is rounded to the nearest frequency bin (exact multiple of the linewidth). If the new center frequency is incompatible with the span because of the 0 to 100 kHz range limits, then the center frequency will be set to the closest allowable value.

Note:
Activating the Start or Center Frequency fields fixes the start or center frequency for subsequent adjustments to the frequency span. Further adjustments to the span leave the span start or center untouched, even when the start or center frequency becomes de-activated as a menu choice. The most recently activated of the Start or Center Frequency fields sets the span adjustment mode.

Enlarging the frequency span may change the start and center frequencies. This is because these frequencies are always exact frequency bins or multiples of the linewidth. Larger spans have larger linewidths and thus the start and stop frequencies may need to be rounded to the nearest allowable bin of the new span.

Measure

The Measure menu is used to select the measurement type, display type, units and window function. The Measure menu also activates the calculator for trace math.

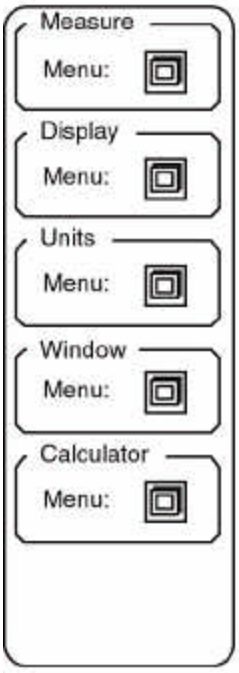

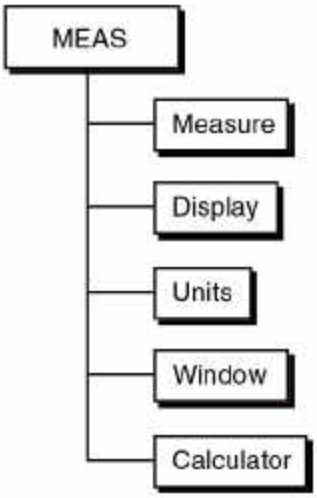

Measure Keys

Each Measure Key activates a sub menu. Each sub menu is described in detail in the following pages.

MEASURE MENU

Measure

The Measure sub menu selects the type of measurement for the active trace.

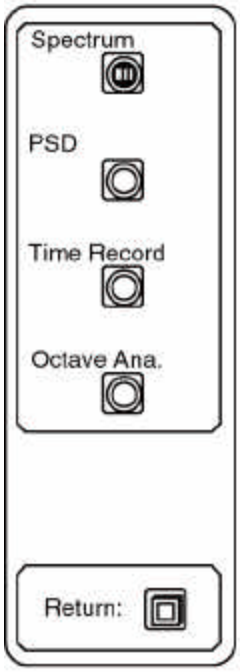

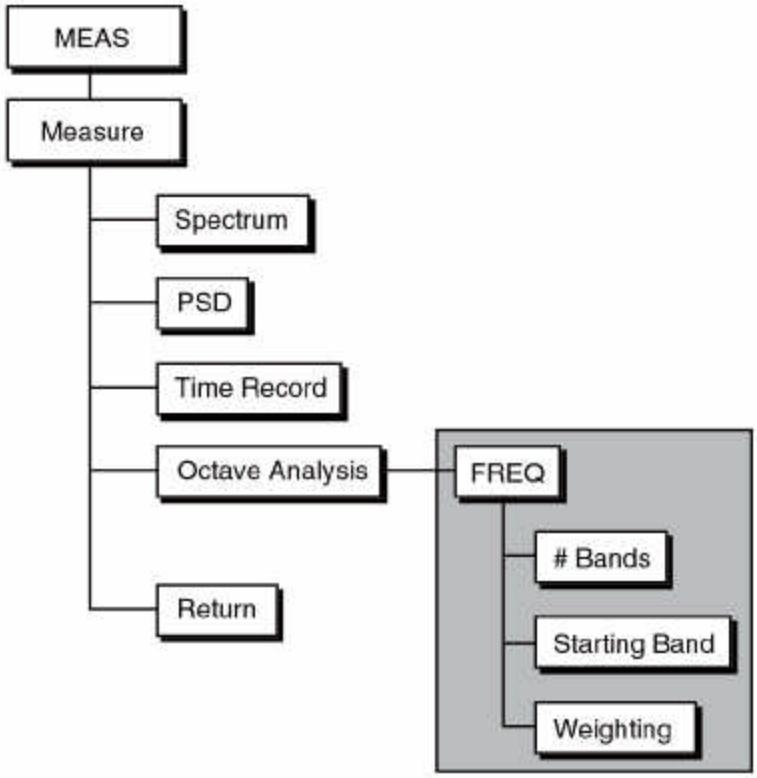

Spectrum

The SR770 filters the input data in real time to provide a time record with the desired frequency span and then performs an FFT on this record. Pressing the Spectrum key displays this FFT on the active trace.

PSD

The PSD or Power Spectral Density is the magnitude of the spectrum (the square root of [the FFT times its complex conjugate]) normalized to a bandwidth of 1 Hz. This measurement approximates the amplitude within a 1 Hz bandwidth located at each frequency bin. The actual linewidth and window function are compensated for in this calculation. This allows measurements taken with different spans or windows to be compared.

Note:
PSD measurements are typically used to measure noise or noise density. The data values are read out in Volts/□Hz or dBV/□Hz. When measuring Gaussian noise sources, the noise in bandwidths other than 1 Hz may be obtained by multiplying the reading by the square root of the desired bandwidth. This is true only for Gaussian noise.

When measuring PSD, the Display may only be set to Log Magnitude or Linear Magnitude.

Time Record

The Time Record is the minimum amount of filtered input data required to generate an FFT with the desired span and linewidth. The SR770 filters the input data in real time to provide a stream of data points with the correct frequency span. The time record consists of 512 of these points, of which only the first 400 are displayed.

When averaging is on, only spectra are averaged. The Time Record shows the latest time record used to calculate a spectrum.

Note:
The SR770 is **not** a digital oscilloscope. The Time Record always shows filtered data and does not resemble an oscilloscope trace of the same input.

The input data filter is a complex filter yielding complex outputs. Thus, the time record has a real and imaginary part as well as phase associated with each time bin.

Octave Analysis

Octave Analysis computes the spectral amplitude within 1/3 octave bands. The analyzer computes a normal FFT, then calculates the rms sum of the frequency components within each band. When Octave Analysis is on, only the Log Magnitude may be displayed. Also, the display is always logarithmic on the X axis, displaying evenly spaced octaves. The left and right most bands are labelled on the graph by center frequency and band number. The marker reads the center frequencies of the bands rounded to the nearest even frequency. The actual band frequencies are exact according to the ANSI standard.

Note:
When octave analysis is on for either trace, the FREQ menu will display the band menu for both traces. This is because both traces must have the same span. Thus, if one trace is measuring octave analysis, the other trace's span is determined by the bands displayed in the octave analysis.

Furthermore, in order to perform 30 band analysis accurately, the SR770 must combine spectra taken with two different overlapping spans. This is because the frequency range of 30 bands requires more than 400 linearly spaced frequency points. When 30 band analysis is chosen, the analyzer alternates between two different spans. If one trace is displaying 30 band octaves, then the other trace will show spectra taken with alternating frequency spans and is not very useful. In general, when using octave analysis, only the trace showing octaves is meaningful.

Only one trace may be measuring octave analysis at a time. The other trace must be measuring spectrum, PSD or time record.

MEASURE MENU

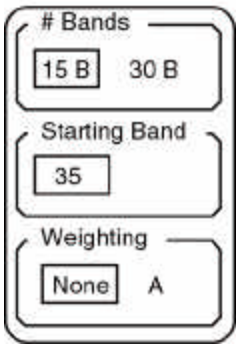

To choose the number of bands displayed, the starting band and the weighting function, use the FREQ menu. The FREQ menu will display the band selection menu shown at the right whenever octave analysis is on.

 # Bands The # Bands key toggles the octave analysis range between 15 and 30 bands. The bands are always 1/3 octave.

Starting Band Pressing this key activates the Starting Band number entry field. The SR770 can display bands -2 through 49. The starting band can range from -2 to 49 minus the number of bands (15 or 30).

Weighting The Weighting key toggles between no weighting and A weighting. A weighting compensates for auditory sensitivity and can provide data comparable to that derived from analog analysis equipment.

Return The Return key will return to the main MEAS menu.

Display

The Display sub menu allows the user to choose the displayed quantity for the active trace.

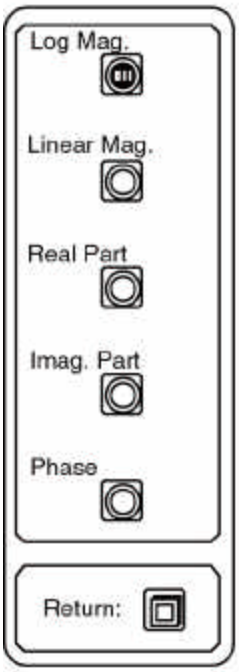

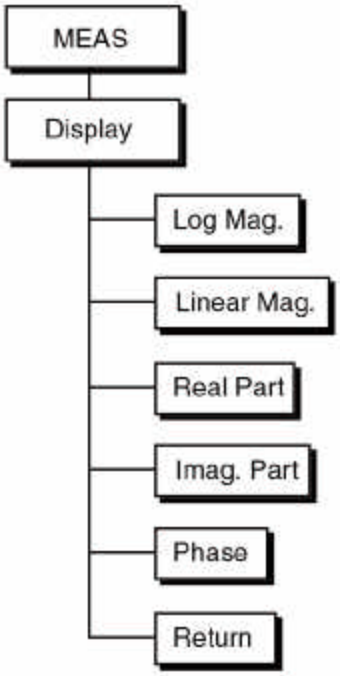

Log Mag.

This key displays the magnitude of the measurement on a logarithmic scale. Only the active trace display is affected. Both the Time Record (as defined in this analyzer) and the corresponding FFT are complex quantities. The magnitude is the square root of the product of the measurement data and its complex conjugate.

Linear Mag.

This key displays the magnitude of the measurement on a linear scale. Only the active trace display is affected. Both the Time Record (as defined in this analyzer) and the corresponding FFT are complex quantities. The magnitude is the square root of the product of the measurement data and its complex conjugate.

Real Part

This key displays the real part of the measurement on a linear scale. Only the active trace display is affected. Both the Time Record (as defined by the SR770) and the corresponding Spectrum are complex quantities and thus have a real part. PSD and Octave Analysis are not complex and only display magnitudes.

Imag. Part

This key displays the imaginary part of the measurement on a linear scale. Only the active trace display is affected. Both the Time Record (as defined by the SR770) and the corresponding Spectrum are complex quantities and thus

have an imaginary part. PSD and Octave Analysis are not complex and only display magnitudes.

Phase

This key displays the phase of the measurement on a linear scale. Only the active trace display is affected. Both the Time Record (as defined by the SR770) and the corresponding Spectrum are complex quantities and thus have phase. PSD and Octave Analysis are not complex and only display magnitudes.

In general, phase measurements are only used when the analyzer is triggered. The phase is relative to the start of the time record.

The phase is displayed in degrees or radians on a linear scale from -180 (-ð) to +180 (+ð) degrees (rads). The phase may be "unwrapped" using the Calculator in the Measure menu.

The phase is calculated starting with the left most bin. If neither the real nor imaginary component of a bin is greater than 0.018% of full scale (-75 dB below f.s.), then the phase is not calculated. In this case, the phase is set to the phase of the most recent bin which exceeded 0.018% of full scale. This avoids the messy phase display associated with the noise floor. (Remember, even if a signal is small, its phase extends over the full 360 degrees.) This display method also preserves cumulative phase rotation as a function of frequency.

Return

The Return key will return to the main MEAS menu.

Units

The Units sub menu allows the user to choose the display units for the active trace.

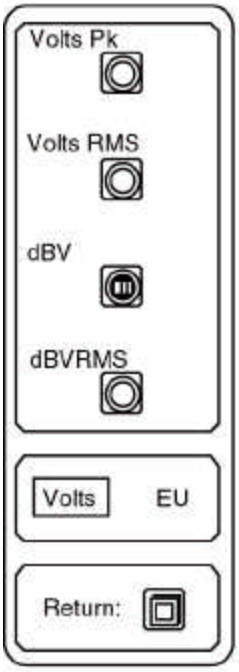

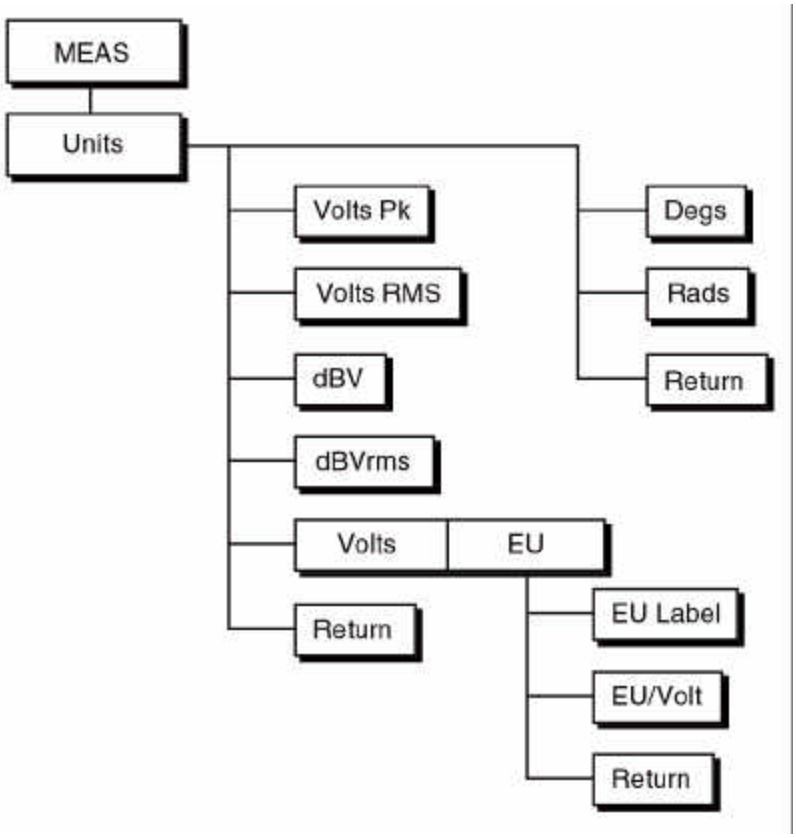

Volts Pk (EU PK)

This key chooses units of Volts Peak or Engineering Units Peak for the active trace.

Volts RMS (EU RMS)

This key chooses units of Volts RMS or Engineering Units RMS for the active trace.

dBV (dBEU)

This key chooses units of dBVolts Peak or dBEngineering Units Peak for the active trace.

dBVRMS (dBEURMS)

This key chooses units of dBVolts RMS or dBEngineering Units RMS for the active trace.

dB units are not available when displaying Real or Imaginary parts of the spectrum. This is because the data values may be negative.

Volts/EU

This key chooses whether the fundamental unit is Volts or user defined Engineering Units (EU). Choosing EU will activate the EU definition menu shown below.

MEASURE MENU

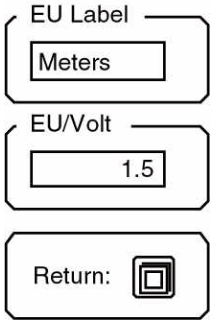

EU Label Pressing this key activates the EU Label entry field. Use the ALT keys to enter a name for the engineering units.

EU/Volt Pressing this key activates the EU scaling entry field. Enter the number of engineering units per Volt.

Return This key returns to the Units sub menu.

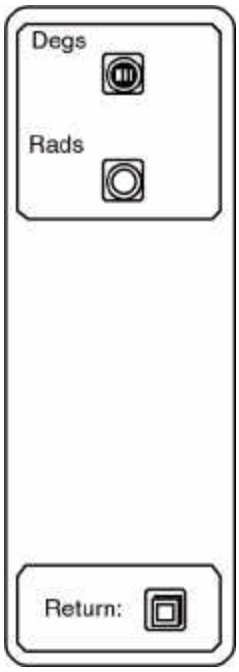

When Phase is being displayed on the active trace, the Units menu appears as shown to the left. Phase values are always between -180 and +180 degrees. The analyzer does not "unwrap" phase.

The phase of a particular frequency bin is set to zero if neither the real nor imaginary part of the FFT is greater than 0.012% of full scale (-78 dB below f.s.). This avoids the messy phase display associated with the noise floor. (Remember, even if a signal is small, its phase extends over the full 360 degrees.)

Degs This key chooses degrees for the Phase display.

Rads This key chooses radians for the Phase display.

Return The Return key will return to the main MEAS menu.

Note:
The choice of units does not affect the display scaling, whether linear or logarithmic. The Marker and data readouts reflect the choice of units but the graph remains unchanged.

Window

The Window submenu allows the user to choose the window function. Both traces use the same window function. A trace may be recalled from disk with a window different than the "live" window. This is the only case where the window on the graph is other than the "live" window shown in this menu.

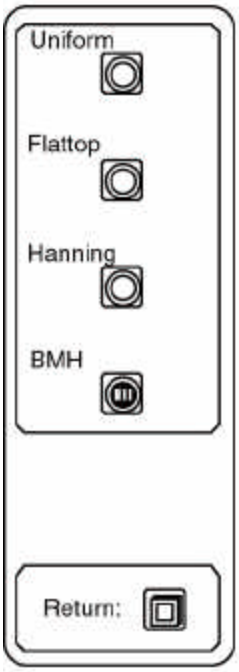

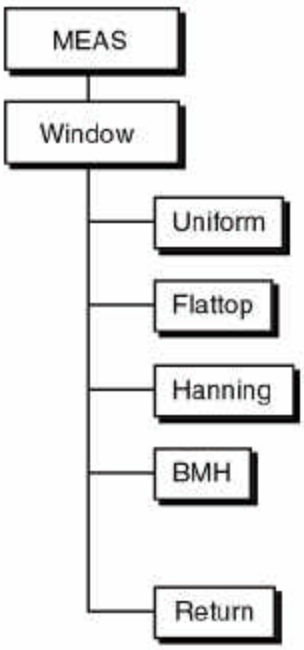

Uniform

This key selects no windowing (uniform or rectangular window function) of the time record. This window provides high amplitude accuracy only for frequencies exactly on a bin and poor frequency selectivity making it a poor choice for continuous signals. It is primarily useful for analyzing impulses and transients which are shorter than a time record.

Flattop

This key selects the Flattop window. This window has the least ripple and thus the smallest amplitude errors for frequencies not exactly on a bin. It is most useful for precise amplitude measurements.

Hanning

This key selects the Hanning window. The Hanning window has a relatively narrow mainlobe and low sidelobes providing low leakage (spectral broadening) and good selectivity.

BMH

This key selects the Blackman-Harris window. This window has the narrowest mainlobe and the fastest roll-off for the best selectivity. This window is especially useful in measurements requiring the more than 70 dB of dynamic range since it has the lowest leakage and broadening of the skirts.

Return The Return key will return to the main MEAS menu.

Calculator

The Calculator sub menu allows the user to perform arithmetic calculations with the trace data. Operations are performed on the entire trace, regardless of graphical expansion.

Calculations treat the data as intrinsic values, either Volts, EU or degrees (radians). If a graph is showing dB, then multiplying by 10 will raise the graph by 20 dB and dividing by 10 will lower the graph by 20 dB.

Performing a calculation on the active trace will set the File Type to Calc to indicate that the trace is not Live. This is shown by the "File=Calc" message at the lower left of the graph. The analyzer continues to run, but the calculated trace will not be updated. To return the trace to live mode, activate the trace and press the [START] key. The File Type will return to Live.

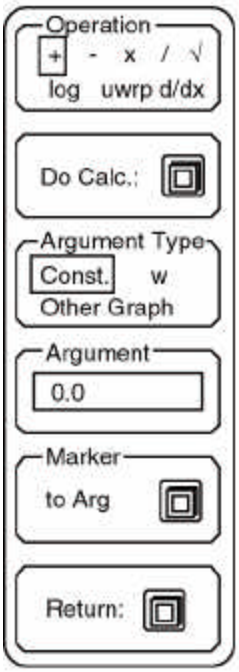

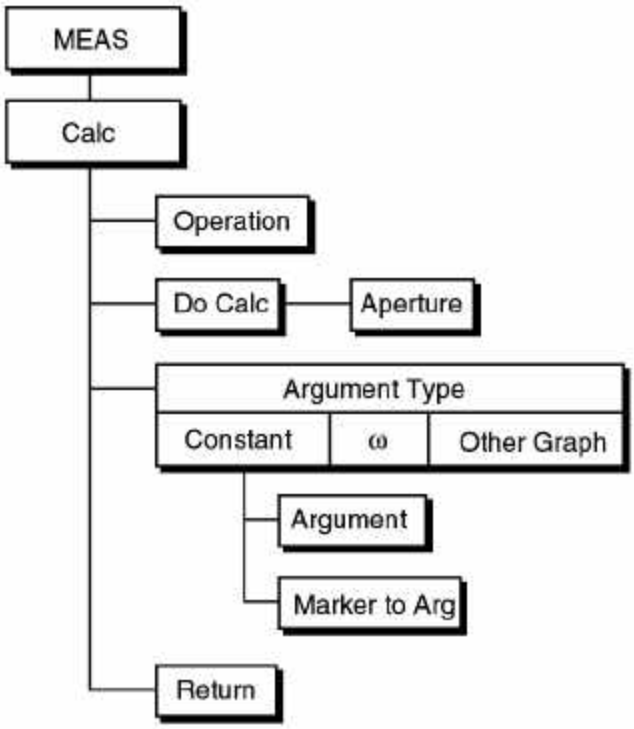

Operation

The Operation function selects the type of operation to be performed. The add, subtract, multiply, and divide functions require a second argument which may be a number, ω (2ðf), or the other trace. The log (base 10), square root, unwrap and d/dx functions require no argument.

Unwrap attempts to display the phase as a continuous curve rather "wrapping" around at ±180° (± ð rads). Phase response curves (as measured using the chirp source) are generally more meaningful unwrapped.

The derivative function, d/dx, differentiates the curve with respect to the x axis (in frequency bins). To convert to d/dω, divide the result by 2ð times the linewidth.

Do Calc

Pressing this key starts the actual calculation. The "Calculating" message appears below the graph while calculations are in progress. The calculation uses the operation specified by the Operation key and uses the argument chosen by the Argument keys.

Note that many operations will require an AutoScale to display the result on the graph.

When the operation is d/dx, a submenu will appear to select the aperture. The aperture, expressed as a percentage of the span, is the how wide an area is considered when calculating the derivative. If the curve is noisy, a wide aperture may be required to yield meaningful results.

Argument Type

The Argument Type function selects between a constant argument, ω (2ðf), and a second data trace. A constant argument adds or subtracts a constant, or multiplies or divides by a constant. Choosing ω uses the argument 2ð•frequency for each frequency bin. The other graph option uses the other (inactive) trace as the argument. There is no attempt to check whether the spans are the same, or even whether the measurement data are of the same type. In this case, calculations are performed on a bin by bin basis, i.e. bin #1 of one trace is added to bin #1 of the other trace, bin #2 is added to bin #2, etc. In the case of divide, the active trace is divided by the inactive trace. A disk file may be used as one of the traces by recalling a file into one of the graphs.

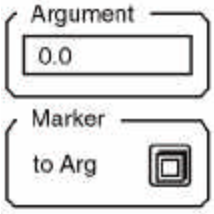

If the Argument type is a constant, then the Argument and Marker to Argument functions are displayed.

Argument

Pressing the Argument key activates the constant argument entry field. Use the keypad to enter a numerical argument. Integer (-3), real (-3.0), or floating point (-0.3E+1) formats are all allowed.

Marker to Arg.

The Marker to Argument will copy the data value of the marker to the constant argument field above. This is convenient when subtracting a baseline or normalizing to a data point.

Note:
This function takes the literal marker readout as shown above the graph and copies it to the argument field. This is true even if the marker is reading in dBV rather than Volts. The calculation will use the argument as if it were Volts and result in meaningless data. Use linear units when using the Marker to Arg. function to avoid this mistake.

Return

The Return key will return to the main MEAS menu.

DISPLAY MENU

Display

The Display menu is used to change the graph parameters and marker type. The settings for the active trace are displayed in this menu. Note that marker movement is activated by the [MARKER] key and not by this menu.

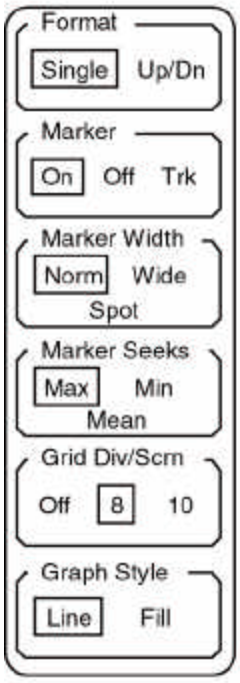

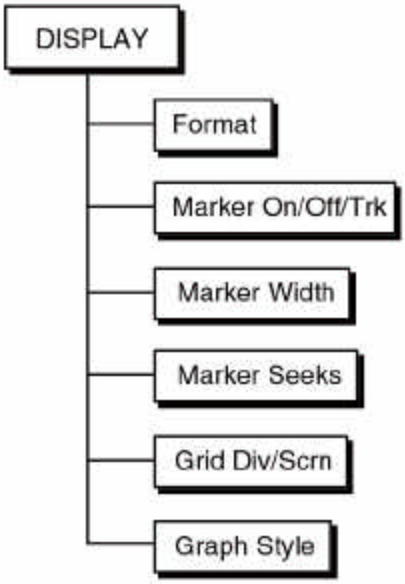

Format

The Format key toggles between single and dual trace screen formats. The [ACTIVE TRACE] key toggles the active trace. If a single graph is displayed, the [ACTIVE TRACE] switches the graph between Trace0 and Trace1. If two graphs are displayed, [ACTIVE TRACE] selects either the upper or lower trace as active. When the format is switched back to Single, the active trace becomes the single displayed trace.

Marker On/Off/Trk

This function turns the marker on and off or selects tracking mode. This function only affects the active trace. Each trace has its own marker. It is sometimes desirable to turn off the marker before printing the screen. When the marker is set to Track, the marker automatically seeks the maximum or minimum point of the trace (according to the Marker Seeks selection).

Marker Width

This function selects the width of the marker region defined by the vertical dashed lines on the graph. Only the marker for the active trace is affected.

Normal width is 1/2 of a division, Wide is 1 division, and Spot is a single X position on the screen (the marker is a single dashed line).

The marker region moves to the left and to the right a single bin at a time.

Marker Seeks

The marker searches the data points within the marker region for the maximum or minimum data value, or calculates the mean of the region. This key toggles between Max, Min, and Mean and only affects the active trace's marker.

When seeking minimum or maximum, the marker is located at the minimum or maximum data point. This allows peaks and valleys in the data to be read easily. When seeking mean, the X position of the marker is the center of the marker region and the Y position is the mean of the data within the region.

Grid Div/Scrn

This function selects no grid or 8 or 10 vertical divisions per graph. The grid is the set of dotted lines on the graph which mark each scale division. This affects only the active trace graph.

Graph Fill

The active trace can be selected to display the spectrum as the envelope of the X values (line), or to fill the solid region below the trace (fill).

MARKER MODE MENU

Marker Mode

The Marker Mode menu is activated with the Mode key in the Marker area of the keypad. This menu is used to manually enter a marker offset as well as searching for peaks in the data.

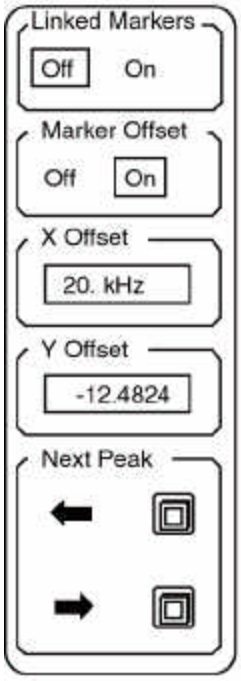

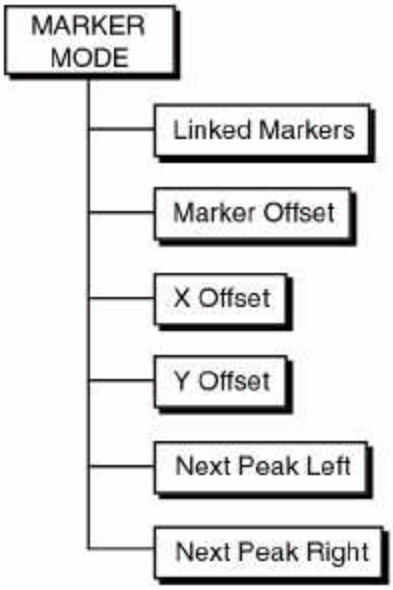

Linked Markers

This key links the markers on the two traces. When the dual trace display format is used, linked markers means that the two markers are always at the same location on the graph. This is true even if one of the traces is showing the time record. This is strictly a graphical function. To move the markers, activate either trace and use the [MARKER] key to move the markers with the knob.

Marker Offset

This function turns on the marker offset. When marker offset is on, a small delta (□) is displayed at the beginning of the marker readout above the graph. The marker readout is now relative to the marker offset. The marker offset location on the graph is marked with a small star shaped symbol.

The [MARKER REF] key toggles the marker offset on and off as well. When the [MARKER REF] key turns on the offset, the X and Yoffsets are set to the current marker position. Pressing the [MARKER REF] key again turns the marker offset off.

X Offset

This key activates the marker X Offset entry field. This is the offset of the marker along the X axis. Only numeric entry is permitted. The X offset is stored as unitless number. When displaying spectra, the offset is interpreted as a frequency. The X offset does not have to be a frequency which is within the current span.

Y Offset

This key activates the marker Y Offset entry field. This is the offset of the marker along the Y axis. Only numeric entry is permitted. The offset is stored as a unitless number. If the display units are changed, then the Y offset needs to be changed. The Y offset does not have to be a value which is currently within the vertical span of the graph.

Next Peak Left

This function moves the marker to the next peak to the left of the current marker position.

Next Peak Right

This function moves the marker to the next peak to the right of the current marker position.

INPUT MENU

Input

The Input menu is used to change the input configuration and input range. In addition, the Trigger and Arming submenus set the triggering mode, level and delay.

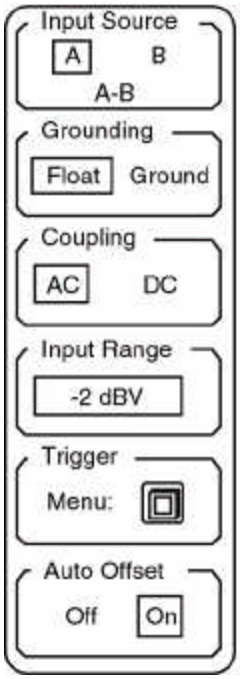

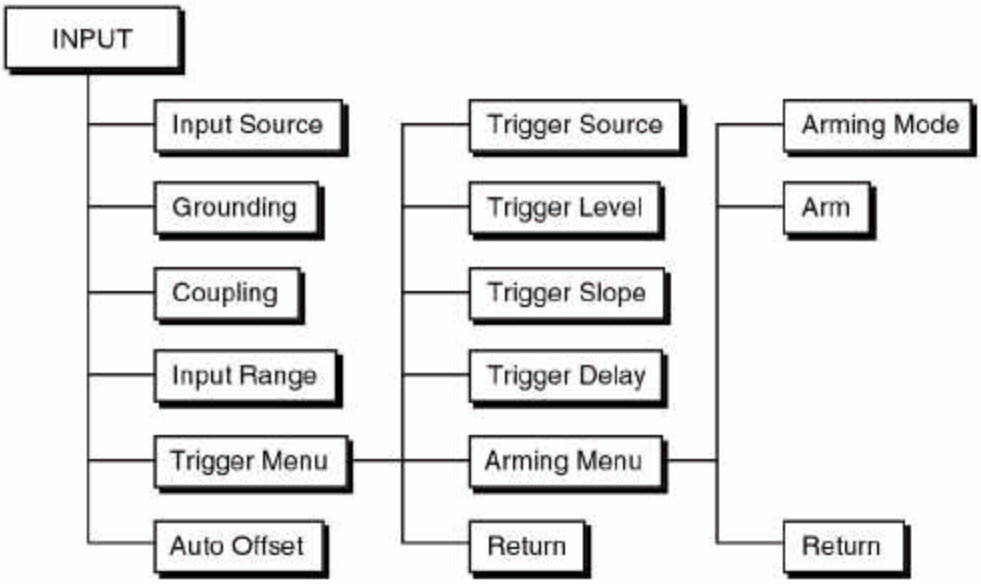

Input Source

The Input Source key selects the front end signal input configuration. The input amplifier can be single-ended (A) or differential (A-B). In general, when looking at very small signals, connect A to the signal source and B to the signal source ground and use A-B. In this case, make sure that the two input cables do not encompass any loop area (twist them together or run them side by side).

Grounding

This key chooses the shield grounding configuration. The shields of the input connectors (A and B) are not connected directly to the analyzer chassis ground. In Float mode, the shields are connected by 1 M□ to the chassis ground. In Ground mode, the shields are connected by 50 □ to the chassis ground. In this mode, do not exceed 3V on the shields. The impedance between the center conductor of each input and the shield is always 1 M□.

Note:
When the input source configuration is set to A-B, the grounding is automatically set to Ground. This is because in the A-B case, the shields are exactly that, shields, and do not carry signal.

Coupling

This key toggles the input coupling between AC and DC. The 3 dB bandwidth of the AC setting is 0.16 Hz.

Input Range

This key activates the Input Range entry field. The input range can only be adjusted using the knob. The displayed value is the full scale signal input just before overload. The input range limits are -60 dBV to +34 dBV in 2 dBV steps. If the input ranging mode is Manual (as toggled by the [AUTO RANGE] key and displayed by the Man.Rng. indicator), then this field sets the input range. If the input ranging mode is AutoRng, then this field displays the current range. Adjusting the input range automatically toggles back to manual ranging mode.

Trigger Menu

This key displays the Trigger configuration menu as described on the following page.

Auto Offset

This function enables Auto Offset calibration. When Auto Offset is On, the analyzer will periodically perform an auto offset calibration. Auto Offset is always set to On when the analyzer is turned on. Setting Auto Offset to Off defeats the periodic offset calibration. Turning Auto Offset On immediately performs an offset calibration and then every few minutes for the first half hour and then less often after that.

The offset calibration takes about a 10 seconds. After offset calibration, the DC frequency bin of any baseband measurement will be minimized.

To calibrate the offsets, the inputs are internally grounded and the amplifier offsets are measured and stored. When making very narrow span measurements, the analyzer will need to re-settle after a calibration. In these cases, it may be best to leave the Auto Offset Off and perform the calibration only when necessary.

Trigger

The Trigger submenu is used to set the trigger mode, level and delay. The Arming submenu selects the arming mode.

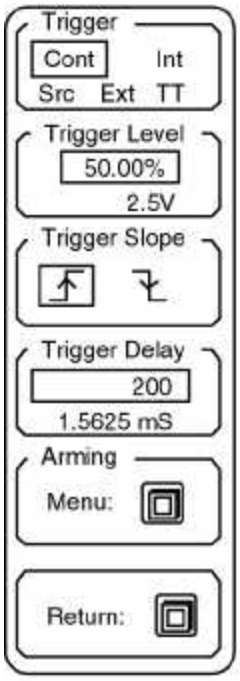

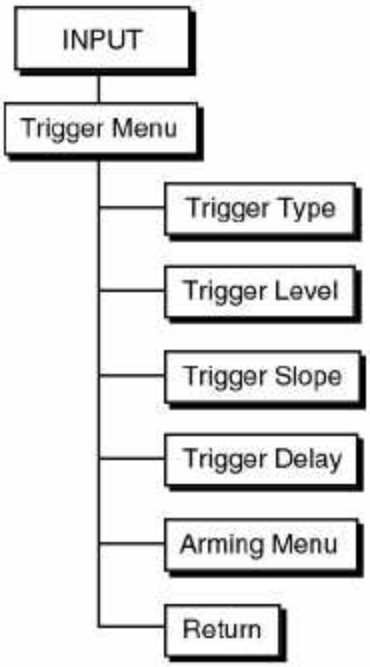

Trigger

The Trigger key selects the trigger type.

Continuous is the same as free run. The analyzer takes time records continuously.

Internal trigger means that time records are triggered by the input signal itself. This is similar to an oscilloscope on internal trigger.

On External or TTL, the time records are triggered by the external trigger input on the front panel. TTL triggers on a TTL level signal while Ext trigger has a variable threshold.

Source trigger works with the sine, two tone and chirp sources. In this mode, spectra are taken with no overlap (at all spans) but without using the trigger circuits. When each time record finishes, the next one begins without delay. Signals which are exactly identical in each time record will appear triggered and have a stable phase. The sine and two tone sources will have stable phase if the frequencies are multiples of the linewidth. The chirp source is defined in this manner.

Remember that the source does not turn on and off synchronously with the input time record. Thus, the phase of the source will be stable but arbitrary. Beware that changing the span, changing the source type, or performing the Auto Offset calibration can all change the absolute phase of the source.

Trigger Level

This key activates the Trigger Level entry field. The level may be entered in Volts or in percent of the input range (for Int trigger) or percent of 5V (for Ext trigger). The knob only adjusts the percent value. A Voltage entry outside of the limits of -100.0% to +99.22% of the applicable range will set the level to the limit. The Voltage reading below the entry field displays the trigger level in Volts.

Note:
Remember that the trigger requires a minimum 100 mV pulse amplitude to successfully trigger. When using the internal trigger, this means that the signal must exceed roughly 8% of the input range (-22 dB below the input range).

Note:
When the unit is successfully triggered in Int, TTL or Ext mode, the Trigger indicator will light. No indicator is present in the Continuous or Source trigger mode.

When the analyzer is in Int, TTL, or Ext trigger mode, and no triggers are received, the display will not update even though the RUN indicator is on. When no triggers have been received after a couple of seconds, the Trg Wait indicator will turn on as a reminder that the unit is awaiting a trigger.

In Int, TTL or Ext trigger mode, the unit will trigger only if the trigger is armed. See the Arming menu.

Trigger Slope

This key toggles the Trigger Slope between rising edge and falling edge (Int, TTL and Ext trigger modes only).

Trigger Delay

This key activates the Trigger Delay entry field (Int, TTL and Ext trigger modes only). The delay may be entered numerically or adjusted using the knob. The delay is set as a number of samples rather than time.

The Source trigger does not have an adjustable delay.

The triggered time record does not have to start with the trigger event. The time record can start before the trigger (negative delay values) or after the trigger (positive delay values). A delay of 0 starts the time record with the next sample following the trigger.

When the delay is positive, the delay is set with a resolution of one sample or 1/512 of the time record. This is equal to the acquisition time divided by 512 (7.8125 µs at full span). The positive limit of the delay is 65000 samples.

When the delay is negative, the delay resolution is one sample of the A/D conversion or 3.9062 µs. The limit of the negative delay is 13300 (51.95 ms) samples.

The time readout below the entry field is the equivalent delay in units of time. Remember, changing the frequency span will change the positive delay times

because the time record and sample times change. The negative delays are not affected by the span.

When a large trigger delay is used, the display may update slower since the acquisition time for each record is the length of the time record plus the trigger delay (which can be noticeably long).

Arming Menu This key displays the Arming configuration menu as described on the following page.

Return This key returns to the main Input menu.

Arming

The Arming submenu selects the arming mode.

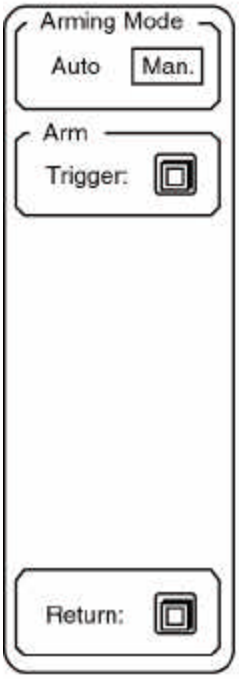

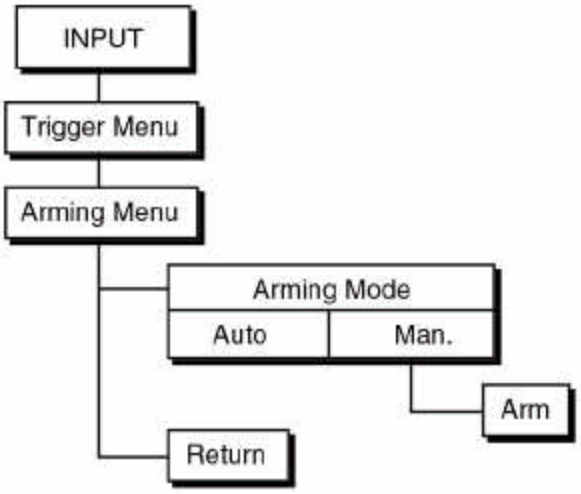

Arming Mode

This key selects the Arming Mode. Triggers are ignored unless the trigger is armed. Arming allows a single triggered time record to be isolated even when using a repetitive trigger source.

Auto arming means that as soon as one triggered time record is processed, the trigger is immediately re-armed. Time records are basically taken as fast as the trigger delay and actual time record length permit.

With Manual arming, no time records are taken until the trigger is armed, either from the front panel using the Arm Trigger softkey, or upon receipt of an arming command from a computer interface. Once the trigger is armed, the next trigger event will trigger a time record. The trigger is not automatically re-armed but waits for an arming command or key.

Note:
If the trigger mode is continuous, the arming mode has no effect.

If the unit is in a triggered mode and arming is set to manual, then the Arm Wait indicator will light if the unit is not armed after a few seconds. This is a reminder that the unit is waiting. Once the unit is armed, the Armed indicator will light. The Trg Wait and Trigger indicators will not turn on unless the unit is armed.

Arm

This key manually arms the trigger. This function only appears if the arming mode is manual.

Return This key returns to the Trigger configuration submenu.

Scale

The Scale menu is used to change the graph X and Y scaling parameters for the active trace.

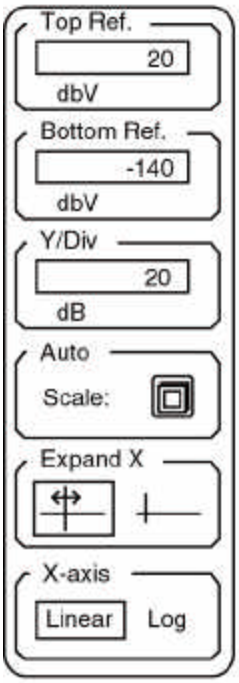

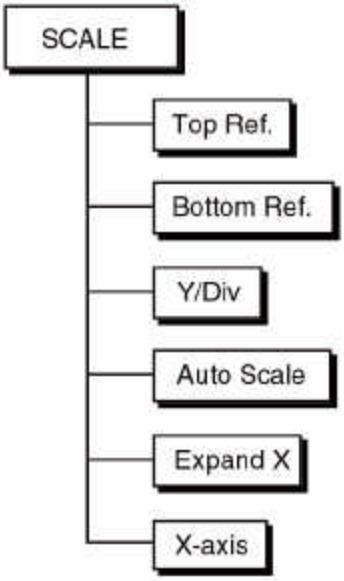

Top Reference

This key activates the Top Reference entry field. The top reference is the Y value of the top of the active trace graph. The top reference is expressed in the same units as the display and marker as set in the Measure menu.

Bottom Reference

This key activates the Bottom Reference entry field. The bottom reference is the Y value of the bottom of the active trace graph. The bottom reference is expressed in the same units as the display and marker as set in the Measure menu.

Y/Div

This key activates the Y/Division entry field. This value is the vertical scale of the active trace graph. If the display is linear, then the vertical scale is expressed in the displayed units. If the display is logarithmic, then the vertical scale is always dB/division. Remember that the reference values and marker readouts in this case are still shown in the previously selected units.

Using the knob adjusts the vertical scale in a 1-2-5-10 sequence. Knob adjustments leave the marker at the center of the graph. The top and bottom reference will be adjusted to make this happen. This gives the effect of vertical zooming.

By using the numeric entry keys, almost any scale may be entered. In this case, the top reference remains fixed while the bottom reference changes.

SCALE MENU

Auto Scale

Pressing this key will automatically set the vertical scale and top and bottom reference of the active trace to display the entire range of the trace. Horizontal scaling is not affected. AutoScale only operates on the data which is displayed on the graph. If the graph is expanded, data corresponding to frequency or time bins which are not shown do not figure in the autoscaling calculations.

This key is identical to the [AUTO SCALE] key.

Expand X

The Expand X key allows the active trace graph to be expanded and translated in the X axis. This key activates knob control of translation (the left icon) and expand (the right icon). Graph expansion is a convenient way of examining closely spaced details of a spectrum without decreasing the span and increasing the acquisition time.

Horizontal expansion displays 128, 64, 30, 15 or 8 bins across the graph. Expansion is about the marker position unless the marker is too close the edge of the span. In this case, expansion leaves one edge of the graph fixed. Whenever a graph is expanded, the Expand at the bottom right of the graph is on.

Horizontal translation is in increments of one bin.

No graphical expansion is allowed when the X-axis is logarithmic.

X-axis

This key selects the X-axis scaling for the active trace. Linear graphs are the normal display for spectrum analyzers. The logarithmic graph is convenient for certain types of filter or broadband noise measurements. The number of frequency bins displayed is always 400 and they are linearly spaced. The log axis merely displays these points differently. The first displayed point of a baseband span (one that starts at DC) is the frequency of the first bin, not DC or 0 Hz.

Analyze

The Analyze menu turns on real-time harmonic, sideband and band analysis as well as Limit and Data tables for the active trace.

Note:
When real-time analysis functions or Limit tables are active, the trace update rate may significantly slow down.

No harmonic, sideband or band analysis is available when measuring Time Record or Octave Analysis, or when displaying Phase.

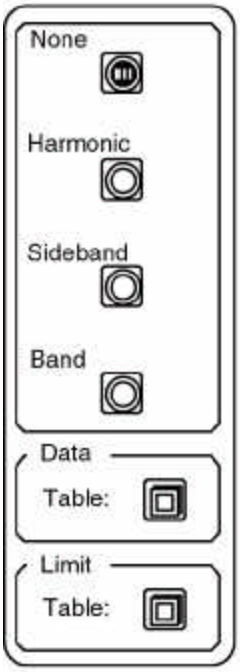

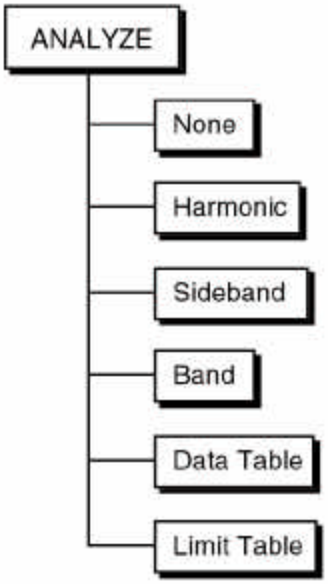

None

This key turns off any real-time harmonic, sideband or band analysis.

Harmonic

If no real-time analysis is on, then this key turns on harmonic analysis for the active trace. The harmonic analysis submenu is displayed and the marker frequency will be entered into the fundamental frequency entry field. If any real-time analysis is already on, then this key simply displays the harmonic analysis submenu without change. The harmonic submenu is described in the following pages.

When harmonic analysis is on, the harmonic level (rms sum of the magnitudes of the harmonic frequency bins) and Total Harmonic Distortion or THD (the harmonic level divided by the fundamental magnitude) are displayed in the upper left corner of the graph. Only those harmonics which appear within the frequency span figure into the calculations of harmonic power.

Sideband

If no real-time analysis is on, then this key turns on sideband analysis for the active trace. The sideband analysis submenu is displayed and the marker

frequency will be entered into the carrier frequency entry field. If any real-time analysis is already on, then this key simply displays the sideband analysis submenu without change. The sideband submenu is described in the following pages.

When sideband analysis is on, the sideband level (rms sum of the magnitudes of the sideband frequency bins) and sideband level relative to carrier (in dBc) are displayed in the upper left corner of the graph. Only those sidebands which appear within the frequency span figure into the calculations of sideband power.

Band

If no real-time analysis is on, then this key turns on band analysis for the active trace. The band analysis submenu is displayed and the marker frequency will be entered into the band center frequency entry field. The band start will be adjusted consistent with the band width. If any real-time analysis is already on, then this key simply displays the band analysis submenu without change. The band submenu is described in the following pages.

When band analysis is on, the band level (rms sum of the magnitudes of all frequency bins within the defined band) is displayed in the upper left corner of the graph. Only the portion of the band which is within the frequency span contributes to the calculation of band level.

Data Table

This key turns on the data table for the active trace and displays the data table submenu which is described in the following pages. The screen format will switch to the dual trace mode and the inactive trace is replaced with the data table window. The data table reports the Y values for user entered X locations. For example, the entries could be a set of harmonic frequencies which need to be monitored. To generate a report of the measurement, the active trace's data table may be printed out using the Plot menu. Each trace has its own data table though only the table associated with the active trace is active and displayed at any time. To remove the data table display, change the Format in the Display menu back to Single.

If no data table is entered (or the data table has been deleted), and harmonic or sideband analysis is turned on, then this key not only activates the data table display, but also enters the harmonic or sideband locations into the table.

Limit Table

This key turns on the limit table for the active trace and displays the limit table submenu which is described in the following pages. The screen format will switch to the dual trace mode and the inactive trace is replaced with the limit table window. The limit table lists the coordinates of the line segments which define the trace limits. When trace data exceeds these limit segments, then the Fail message appears and an audio alarm sounds. To generate a listing of the active trace's limit table, use the Print Limits function in the Plot menu. Each trace has its own limit table though only the table associated with the active trace is active and displayed at any time. To remove the limit table display, change the Format in the Display menu back to Single.

Harmonic

The Harmonic analysis submenu turns on real-time harmonic analysis and sets the fundamental frequency and number of harmonics. Functions also automatically move the span center frequency to adjacent harmonics.

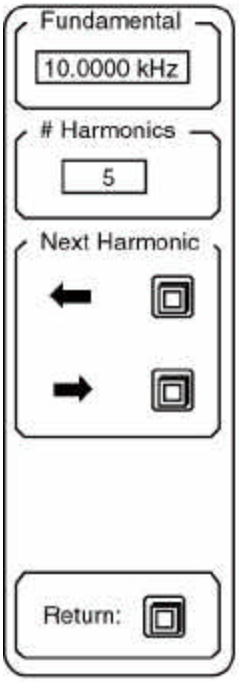

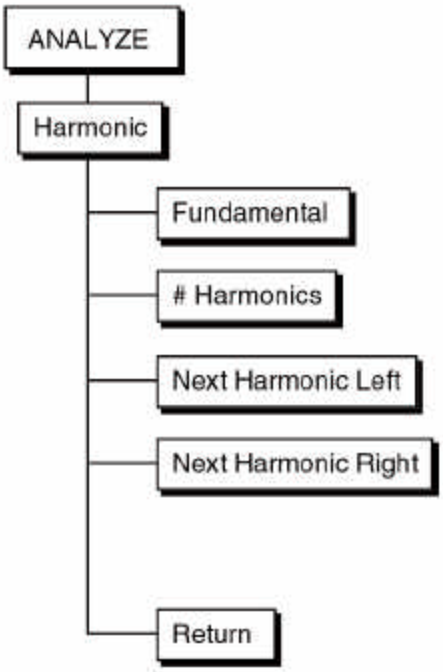

Fundamental

This key activates the fundamental frequency entry field. If no real-time analysis was on when the harmonic submenu was entered, then this field is automatically filled with the marker frequency. The [Marker Entry] key copies the marker frequency into this field even when it is not activated. When this field is activated, knob adjustments and numeric entry are permitted. Note that marker entries and knob adjustments are done with the resolution of the current frequency span. If the actual fundamental is not exactly equal to a frequency bin, then higher harmonic frequencies will be more and more inaccurate. In this case, the frequency should be entered numerically with as much precision as necessary.

The harmonic frequency bins on the graph are identified by a small triangle marker located at the Y positions of each harmonic bin. This is helpful in determining whether the fundamental frequency is accurate enough to ensure that all harmonics are correctly identified.

 # Harmonics

This key activates the # of Harmonics entry field. Harmonics up to 400 may be entered, though only those which are in the frequency span will enter into the harmonic calculations and be identified on the graph. If 0 harmonics are entered, the harmonic level readout will be zero.

Next Harmonic Left

This function moves the marker to the next harmonic to the left of the current marker position if it is on the graph. If it is beyond the edge of the graph, the

span center frequency is set to the frequency of the next harmonic (or as close as the frequency range allows).

Next Harmonic Right This function moves the marker to the next harmonic to the right of the current marker position if it is on the graph. If it is beyond the edge of the graph, the span center frequency is set to the frequency of the next harmonic (or as close as the frequency range allows).

Return This key returns to the main Analyze menu.

Sideband

The Sideband analysis submenu turns on real-time sideband analysis and sets the carrier and separation frequencies and number of number of sidebands.

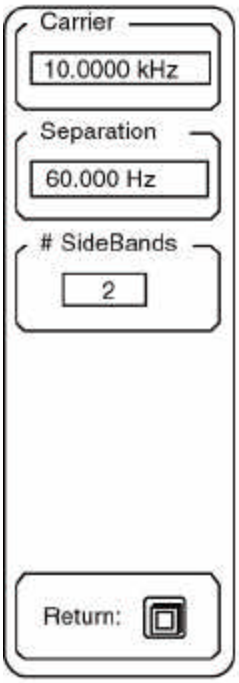

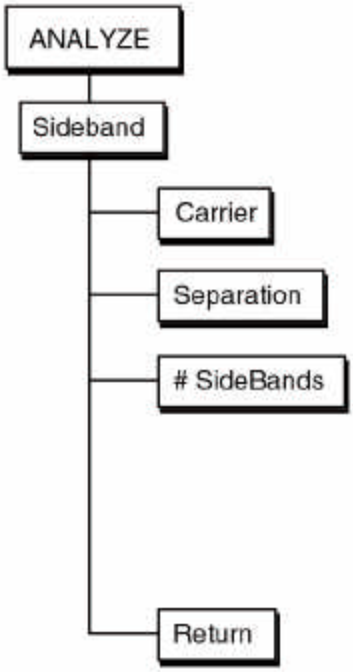

Sidebands are identified according to the formula
Sideband n = Carrier ± n•Separation
where n varies from 1 to the # of sidebands.

Carrier

This key activates the carrier frequency entry field. If no real-time analysis was on when the sideband submenu was entered, then this field is automatically filled with the marker frequency. The [Marker Entry] key copies the marker frequency into this field even when it is not activated. When this field is activated, knob adjustments and numeric entry are permitted. Note that marker entries and knob adjustments are done with the resolution of the current frequency span. If the actual carrier is not exactly equal to a frequency bin, then higher order sideband frequencies will be more and more inaccurate. In this case, enter the frequency numerically with as much precision as necessary.

The sideband frequency bins on the graph are identified by small triangle markers located at the Y positions of each sideband bin. This is helpful in determining whether the carrier and separation frequencies are accurate enough to ensure that all sidebands are correctly identified.

Separation

This key activates the separation frequency entry field. When this field is activated, the knob adjusts the separation with the resolution of the current frequency span. This resolution may lead to the higher order sideband frequencies being more and more inaccurate. In this case, enter the frequency numerically with as much precision as necessary.

 # Sidebands This key activates the # of Sidebands entry field. Up to 200 sidebands may be entered, though only those which are in the frequency span will enter into the sideband calculations and be identified on the graph. If 0 sidebands are entered, the sideband level readout will be zero.

Return This key returns to the main Analyze menu.

Band

The Band analysis submenu turns on real-time Band analysis and sets the band location. A band is a range of frequencies defined by the band start, center and width.

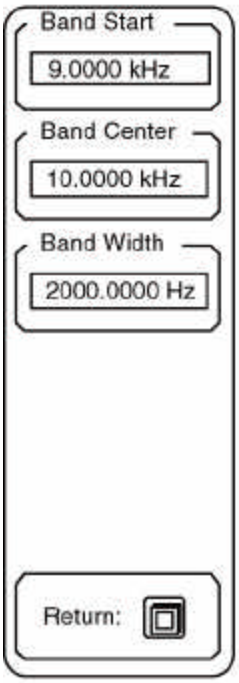

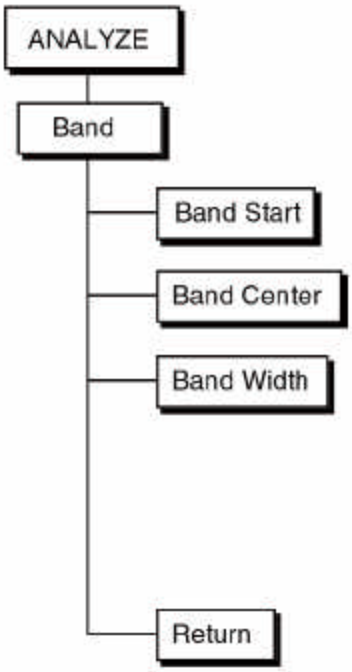

The frequency band is identified by a horizontal bar at the bottom of the graph. The bar covers the region of the band.

Band Start

This key activates the band start entry field. If no real-time analysis was on when the band submenu was entered, then this field is automatically filled with the marker frequency minus half of the band width (the band center is set to the marker frequency). When this field is activated, knob adjustments and numeric entry are permitted. Note that knob adjustments are done with the resolution of the current frequency span. For increased precision, enter the frequency numerically.

Band Center

This key activates the band center frequency entry field. If no real-time analysis was on when the band submenu was entered, then this field is automatically filled with the marker frequency. The [Marker Entry] key copies the marker frequency into this field even when it is not activated. When this field is activated, knob adjustments and numeric entry are permitted. Note that marker entries and knob adjustments are done with the resolution of the current frequency span. For increased precision, enter the frequency numerically.

Band Width This key activates the bandwidth entry field. When this field is activated, knob adjustments and numeric entry are permitted. Note that knob adjustments are done with the resolution of the current frequency span. For increased precision, enter the frequency numerically.

Return This key returns to the main Analyze menu.

Data Table

The data table reports the Y values for user entered X locations. For example, the entries could be a set of harmonic frequencies which need to be monitored. To generate a report of the measurement, the active trace's data table may be printed out using the Plot menu. Each trace has its own data table though only the table associated with the active trace is active and displayed at any time. To remove the data table display, change the Format in the Display menu back to Single.

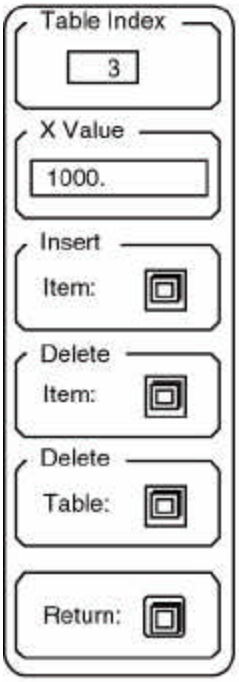

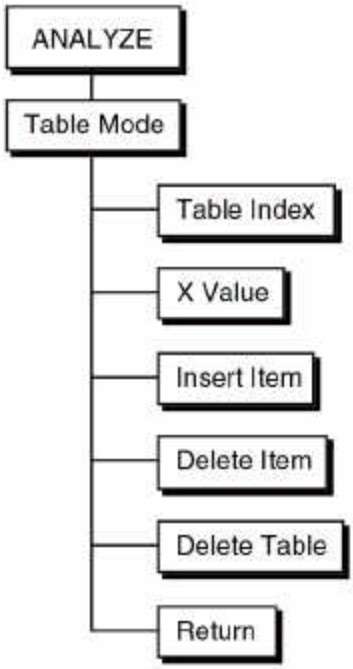

Note:
If no data table is entered (or the data table has been deleted), and harmonic or sideband analysis is on, then entering this submenu not only activates the data table display, it also enters the harmonic or sideband locations into the table.

Data tables are saved along with the trace data when data is saved to disk.

Data Tables are not stored in non-volatile memory and are not retained when the power is turned off. **Save data to disk to preserve the data tables!**

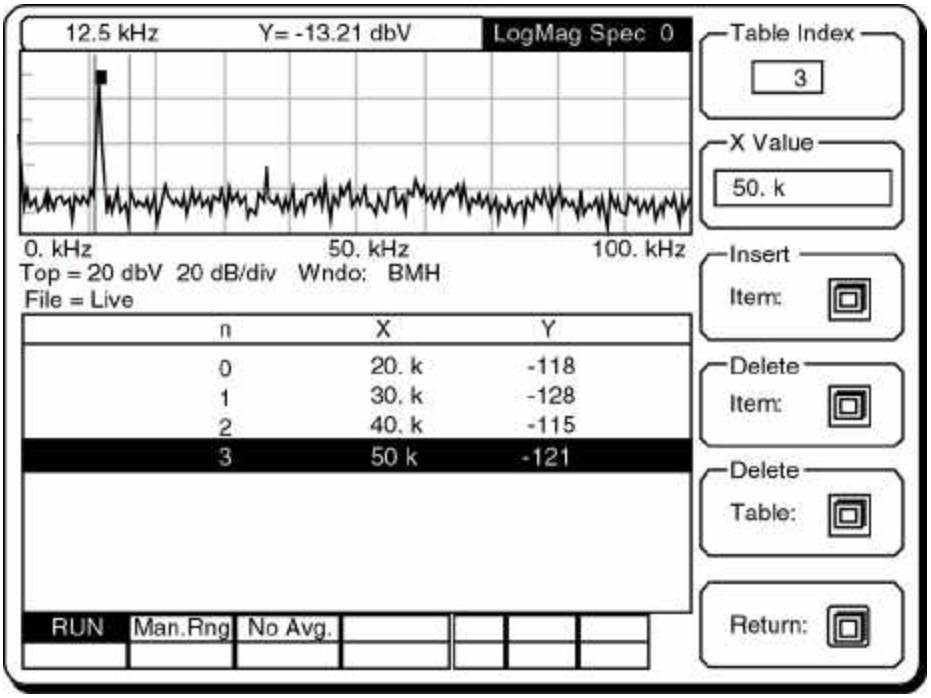

A sample data table display is shown above. The table entries are n (table index or line number), X (user defined X values), and Y (measured data values corresponding to the X values). The Y value is actually for the frequency bin which is closest to the entered X value (within one bin resolution). The Y values shown in the table are in the units of the display. X values which are not in the frequency span have the message OVRG for their Y values.

Table Index

This key activates the Table Index entry field. Knob adjustment and numeric entry are both permitted. When using the knob, scrolling past the last index will add a new line. If an index greater than the last index is entered, then a new line is added after the end of the table.

If the table is longer than what can be displayed in the window, then the table index can be used to scroll the window. Entering an index will always display that line in the window for viewing or editing.

X Value

This key activates the X Value entry field. The X value of the highlighted line may be entered using the numeric keypad. No knob adjustment is allowed. When this field is active, the [MARKER ENTRY] key will copy the marker X position into this field.

Insert Item

This function inserts a new line before the highlighted line. The new line becomes highlighted and is ready for editing.

Delete Item This function deletes the highlighted line and highlights the following line.

Delete Table This function deletes the entire table.

Return This key returns to the main Analyze menu.

Limit Table

The limit table lists the X,Y coordinates of the line segments which define the trace test limits. When trace data exceeds these limit segments, then the test fails. To generate a listing of the active trace's limit table use the Print Limits function in the Plot menu. Each trace has its own limit table though only the table associated with the active trace is active and displayed at any time. To remove the limit table display, change the Format in the Display menu back to Single.

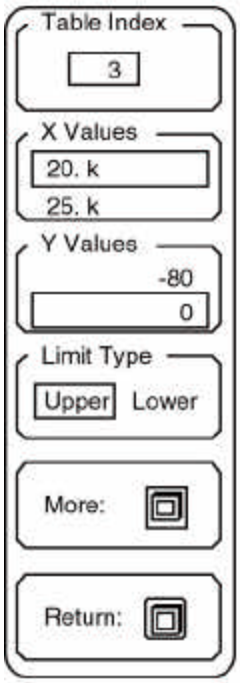

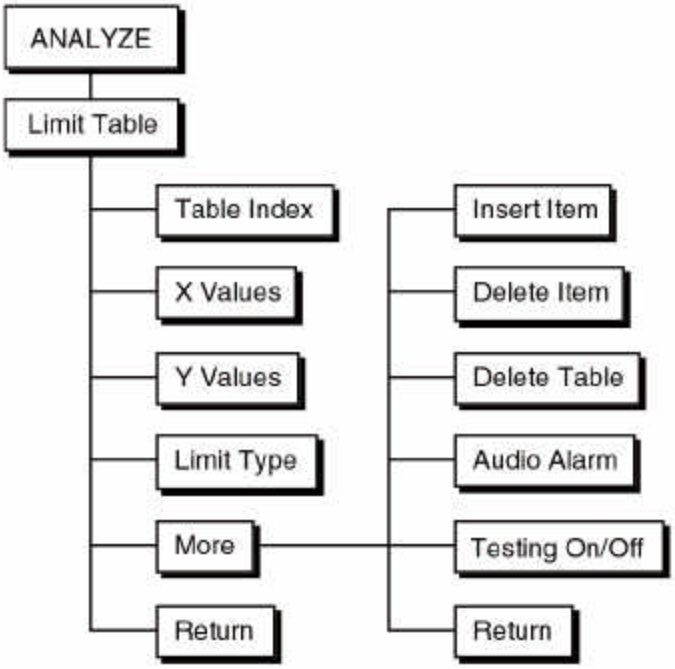

A limit segment is defined as the line segment between the pair of points (Xbegin,Y1) and (Xend,Y2) as shown below. The segment values between the endpoints are calculated for the displayed frequency span.

A segment may be defined as either an upper or lower limit. Trace data values which are greater than an upper or less than a lower limit cause the test to fail.

Note:
Y values are entered without units. They are simply numbers. When the display units are changed, the limit table is unaffected. and the limit tests will compare the trace data in the new units with the old limit table values. Be

careful to use the limit tables only when the entered Y values match the displayed units.

Trace data is compared with the limits only over the range of X values or frequencies for which limit segments have been defined. Segments do not have to cover the entire span or be connected. The four segments shown below comprise a legitimate limit table. Frequencies not included within any segment are not tested. If both segments 2 and 4 are upper limits, then the lower limit (segment 4) is tested.

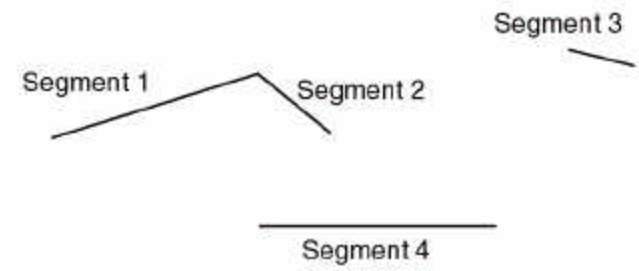

Note:
Limit segments are graphed on the display.

In the case of logarithmic X axis, the segments are still displayed graphically as a straight line. This graphical line is the limit. Thus, a given limit test may give different results depending upon the type of X axis displayed.

The result of the limit test is shown by the Pass/Fail indicator at the bottom of the screen. In addition, an audio alarm may be sounded. Each displayed trace is tested. The limit testing may be turned off while in the Limit menu. It is recommended that testing be turned off while entering a complex table since live testing can slow the analyzer response.

Note:
Limit tables are saved along with the trace data when data is saved to disk.

Limit tables are not stored in non-volatile memory and are not retained when the power is turned off. **Always save data to disk to preserve the limit tables.**

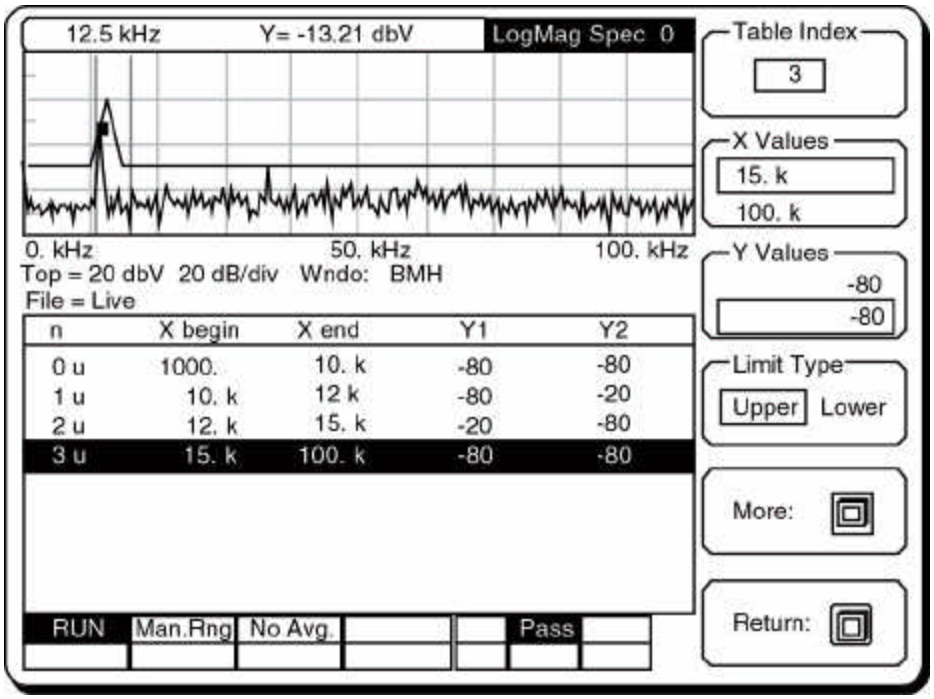

A sample limit table display is shown above. The table entries are n (table index or line number), type of limit (upper or lower, u or l), Xbegin, Xend and Y1 and Y2. For the purposes of testing, the limit segments are generated with the assumption that frequency bin 0 extends from the start frequency to the start frequency plus the linewidth and so on. A segment whose Xbegin value is between bin frequencies would test the lower frequency bin's data value against Y1. The rest of the segment is calculated on this basis. If more resolution is required, then a narrower span is required.

Only segments or the portions of segments within the frequency span are tested. Limits outside the span are ignored.

Table Index

This key activates the Table Index entry field. Knob adjustment and numeric entry are both permitted. When using the knob, scrolling past the last index will add a new line. If an index greater than the last index is entered, then a new line is added after the end of the table.

New segments are generated with Xbegin equal to Xend of the previous segment and the same X span. The Y values are set to the value of Y2 for the previous segment. This simplifies the building of a continuous limit table.

If the table is longer than what can be displayed in the window, then the table index can be used to scroll the window. Entering an index will always display that line in the window for viewing or editing.

X Values

This key activates the selected X Value entry field. Pressing the key again toggles to the other X value. The upper value is Xbegin and the lower value is Xend. The X values of the highlighted line may be entered using the numeric keypad. No knob adjustment is allowed. When this field is active, the [MARKER ENTRY] key will copy the marker X position into this field.

Y Values

This key activates the selected Y Value entry field. Pressing the key again toggles to the other Y value. The upper value is Y1 and the lower value is Y2. The Y values of the highlighted line may be entered using the numeric keypad. No knob adjustment is allowed. Remember, these values are simply numbers and have no units. It is the user's responsibility to ensure that these values correspond to the displayed units.

Limit Type

This function selects the type of limit, either upper or lower, for the highlighted line.

More

This function displays a submenu for inserting or deleting lines, turning on the audio alarm, and enabling testing. This submenu is described on the following pages.

Return

This key returns to the main Analyze menu.

Limit Table More

This submenu allows limit table entries to be inserted and deleted, and audio alarms and limit testing to be enabled.

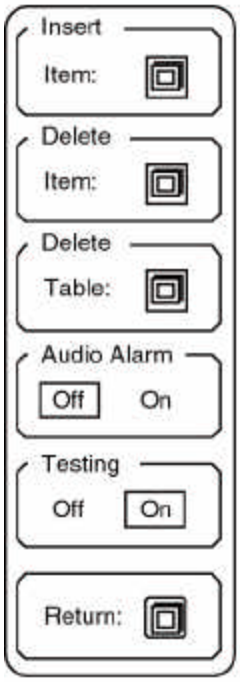

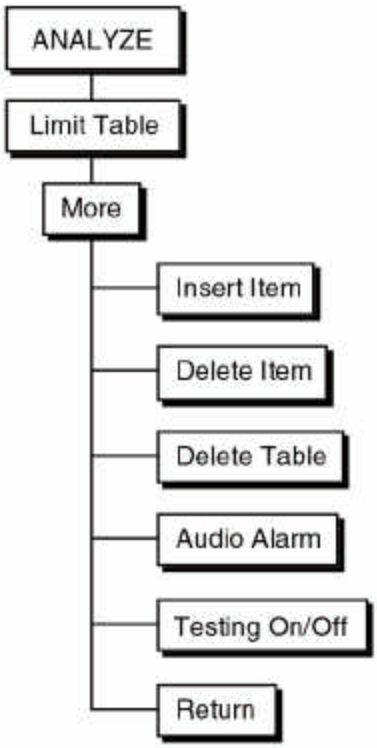

Insert Item — This function inserts a new line before the highlighted line. The new line becomes highlighted and is ready for editing.

Delete Item — This function deletes the highlighted line and highlights the following line.

Delete Table — This function deletes the entire table.

Audio Alarm On/Off — This function turns the audio alarm on and off. The audio alarm sounds whenever a limit test fails.

Testing On/Off — This function turns limit testing on and off. Limit tests may be turned off while entering a table. Limit testing is only active when the limit table is displayed, regardless of this setting.

Return — This key returns to the main Limit Table menu.

Average

The Average menu selects trace averaging, number of averages, type of averaging and amount of overlap. The averaging parameters apply to both traces.

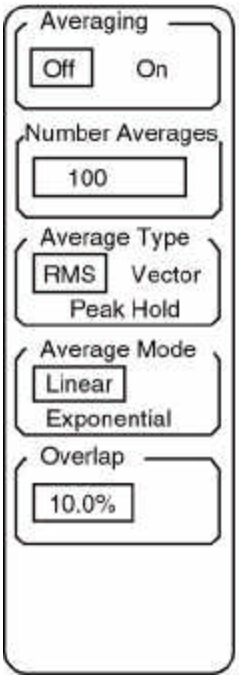

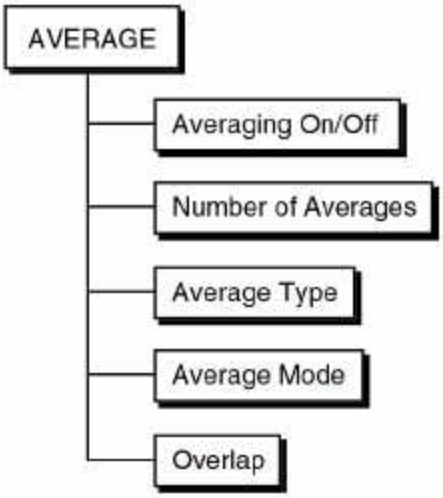

Note:
The [START] key starts an average. The [PAUSE/CONT] key will pause an average in progress. Pressing [PAUSE/CONT] again will resume the average where it was paused. Pressing the [START] key always resets the average before restarting.

With wide frequency spans, the high real time bandwidth of the SR770 allows many averages to be completed between each screen update. For small numbers of averages, averaging is almost instantaneous.

Averaging On/Off

This key turns Averaging on and off. The Avrging/No Avg. indicator at the bottom of the screen shows the state of this function.

Number of Averages

This key activates the Number of Averages entry field for both numeric entry and knob adjustment. This is the number of spectra which are averaged together in linear averaging and the weighting factor for exponential averaging. The number of averages allowed ranges from 2 to 32,767.

Changing the number of averages while in the RUN mode resets the averages and starts over. If the analyzer is stopped, then the average is not reset nor restarted.

Average Type

This function selects the Averaging Type, either RMS, Vector or Peak Hold.

RMS Averaging

This averages the magnitude of the spectra in an RMS fashion. The displayed data is the square root of the weighted mean of the sum of the magnitudes squared (FFT times its complex conjugate). The weighting is either linear or exponential.

RMS averaging reduces fluctuations in the data but does not reduce the actual noise floor. With a sufficient number of averages, a very good approximation of the actual random noise floor can be displayed.

Note:
Since the RMS averaging is done on magnitudes only, displaying the real or imaginary part or phase of an RMS average has no meaning. The RMS average has no complex information. If the real or imaginary part or phase is being displayed, the display will not update when RMS averaging is on.

Vector Averaging

Vector averaging averages the complex spectrum. This can reduce the noise floor for random signals since they are not phase coherent from time record to time record.

Vector averaging requires a trigger. The input signal must be both periodic and phase synchronous with the trigger. Otherwise, the real and imaginary parts of the signal will not add in phase and instead will cancel randomly.

With vector averaging, the real and imaginary parts as well as phase displays are correctly averaged and displayed. This is because the complex information is preserved.

Peak Hold

Peak Hold is not really averaging, rather the new spectral magnitudes are compared to the previous data, and if the new data is larger, then the new data is used. This is done on a bin by bin basis. The resulting display shows the peak magnitudes which occurred in the previous spectra. If linear averaging is used, then only N spectra are compared. If exponential averaging is used, then peak hold keeps comparing spectra indefinitely.

Peak Hold detects the peaks in the spectral magnitudes and only applies to Spectrum, PSD, and Octave Analysis measurements. However, the peak values are stored in the original complex form. If the real or imaginary part or phase is being displayed for spectrum measurements, the display shows the real or imaginary part or phase of the complex peak value.

Average Mode

This key selects either Linear or Exponential averaging.

Linear Averaging

Linear averaging combines N (number of averages) spectra with equal weighting in either RMS, Vector or Peak Hold fashion. When the number of

averages has been completed, the analyzer stops and an audio beep is sounded. When linear averaging is in progress, the number of averages completed so far is displayed below the Avrging indicator at the bottom of the screen.

Auto ranging is temporarily disabled when a linear average is in progress. Be sure not to change the input range manually either. Changing the range during a linear average invalidates the results.

Exponential Averaging
Exponential averaging weights new data more than old data. Averaging takes place according to the formula,

$$Average_N = (New\ Spectrum \bullet 1/N) + (Average_{N-1}) \bullet (N-1)/N$$

where N is the number of averages.

Exponential averaging continues indefinitely. To stop the averaging, use the [PAUSE/CONT] key. When paused, the [PAUSE/CONT] key will resume the averaging while the [START] key will reset the average before restarting.

Exponential averages "grow" for approximately the first 5N spectra until the steady state values are reached. Once in steady state, further changes in the spectra are detected only if they last sufficiently long. Make sure that the number of averages is not so large as to eliminate the changes in the data that might be important.

Overlap

This key activates the Overlap Percentage entry field.

For most frequency spans, the SR770 can compute the FFT in less time than it takes to acquire the time record. With 0% overlap the analyzer computes one FFT per time record and then waits until the next time record is complete before computing the next FFT. The update rate is no faster than one spectra per time record. With narrow spans, this can be quite slow.

With overlap processing, the analyzer does not wait for the next complete time record before computing the next FFT. Instead it uses data from the previous time record as well as data from the current time record to compute the next FFT. This speeds up display updates as well as reduces the variations due to windowing. Remember, most window functions are zero at the start and end of the time record. Thus, the points at the ends of the time record do not contribute much to the FFT. With overlap, these points are "re-used" and appear as middle points in other time records. This is why overlap speeds up averaging and smoothes out window variations. Typically, time records with 50% overlap provide as much noise reduction as non-overlapping time records when RMS averaging. When RMS averaging narrow spans, this can reduce the measurement time by a factor of 2.

The maximum overlap is determined by the amount of time it takes to calculate an FFT and the length of the time record and thus varies according to the span.

Note:

The SR770 always tries to use the maximum amount of overlap possible. Whenever a new frequency span is selected, the overlap is set to the maximum possible value for that span. If less overlap is desired, then use this key to program in a smaller value. On the widest spans (25, 50 and 100 kHz), no overlap is allowed.

If the measurement is triggered, then overlap is ignored. Time records start with the trigger. The analyzer must be in continuous trigger mode to use overlap processing.

SOURCE MENU

Source

The Source menu selects source output waveform. The configure source menu sets the source parameters such as amplitude and frequency.

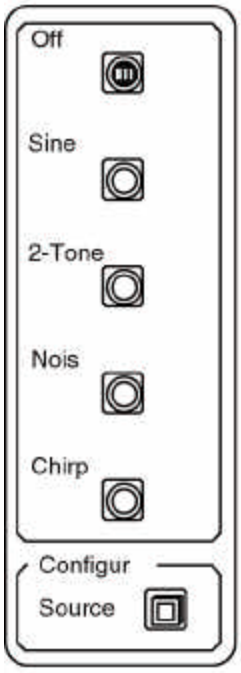

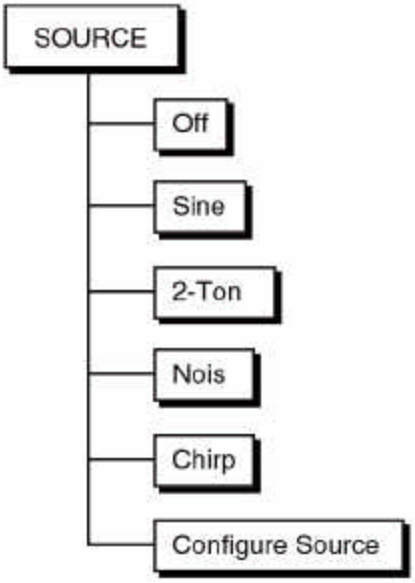

Note:
The SR770 Source has an output impedance of less than 5 □. The source can drive a 50 □ load to full amplitude. The source is calibrated with a high impedance load.

Source Off

This key turns the source off. The output is held at 0V.

Sine

This key sets the source output to sinewave. The output is a low distortion sine wave for general purpose gain, distortion and signal/noise measurements. The sinewave can be synchronous with the FFT, i.e. sine waves can be generated at exact bin frequencies of the FFT. This can eliminate windowing effects in the measured amplitude and phase. Press <Configure Source> to set the sine parameters.

2-Tone

This key sets the source output to two tone. The output is the sum of two low distortion sine waves for intermodulation distortion tests (IMD). Each tone has independent frequency and amplitude settings. Press <Configure Source> to set the two tone parameters.

Noise

This key sets the source output to noise. Broadband noise is useful for characterizing circuits, mechanical systems or even the audio response of an entire room. White noise provides equal amplitude per root Hz from 0 to 100

kHz, regardless of the measurement span. White noise is useful in electronic applications. Pink noise rolls off at 3 dB/oct providing equal amplitude per octave. Pink noise is preferred in audio applications. Press <Configure Source> to set the noise parameters.

Since the signal is noisy and random, windows are always required when using the noise source.

Source triggering is not meaningful since there is no stable phase information in the source.

Chirp

This key sets the source output to the chirp waveform. The Chirp waveform provides an equal amplitude sine wave at each bin of the displayed spectrum. Since there are 400 bins in a spectrum, the chirp is the sum of 400 discrete sine waves. The phases of each sine wave are arranged so that they do not add in phase and the resulting output does not peak. This source is useful for measuring transfer functions quickly without having to make many discrete measurements using a single sine wave. Press <Configure Source> to set the chirp parameters.

Configure Source

Each source has a configuration menu which is accessed by selecting the source type and then pressing the <Configure Source> key. Each type of configuration menu is described in the following pages.

Configure Sine

The Configure Sine submenu allows the frequency and amplitude of the sinewave to be set.

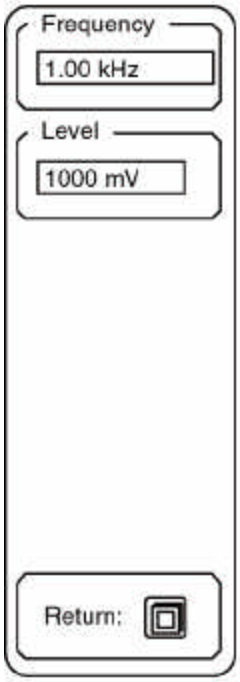

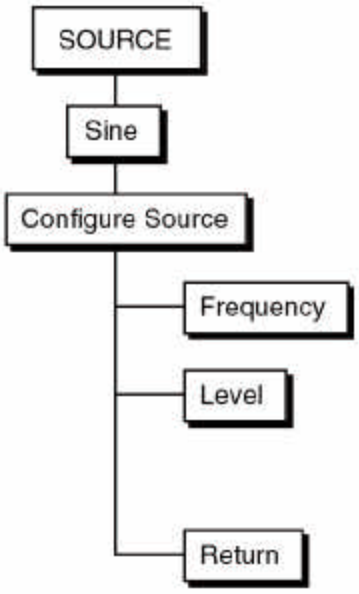

Frequency

This key activates the sine frequency entry field. When the knob is used to adjust the frequency, the resolution is equal to the linewidth of the measurement span. The knob always sets the sine frequency to an exact multiple of the linewidth.

The keypad allows random frequencies to be entered. The fundamental frequency resolution of the sine source is 15.26 mHz (1 kHz/65536). The entered frequency will be rounded to the nearest multiple of 15.26 mHz.

Remember, the output is periodic over the input time record only if the frequency is a multiple of the linewidth. Source triggering will not result in a stable phase for random frequencies.

Level

This key activates the sine level entry field. The output level is expressed in mVpk. The level may be entered in either mVpk or dBVpk. The knob always adjusts the level in mVpk. The resolution is 1 mV for levels greater than 100 mV, and 0.1 mV for levels less than 100 mV.

Return

This key returns the main source selection menu.

Configure 2-Tone

The Configure 2-Tone submenu allows the frequencies and amplitudes of the tones to be set.

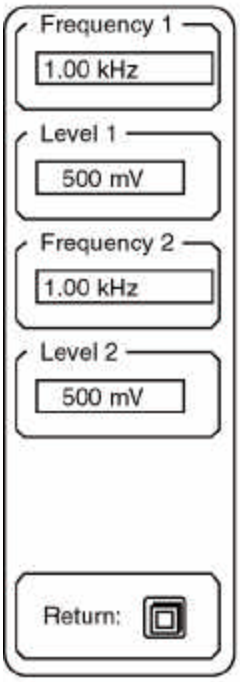

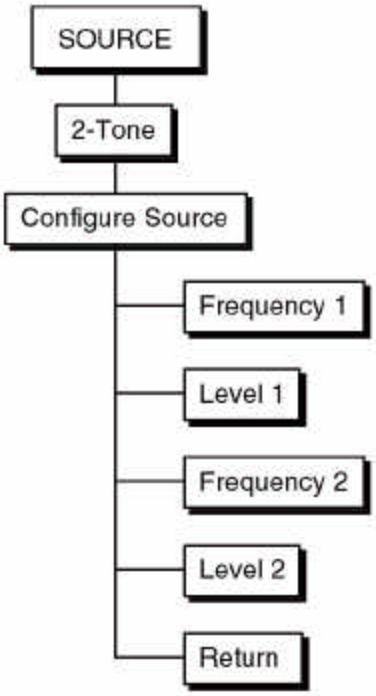

Frequency 1, 2

These keys activate the frequency entry fields for tones 1 and 2 When the knob is used to adjust the frequency, the resolution is equal to the linewidth of the measurement span. The knob always sets the tone frequency to an exact multiple of the linewidth.

The keypad allows random frequencies to be entered. The fundamental frequency resolution of the tone is 15.26 mHz (1 kHz/65536). The entered frequency will be rounded to the nearest multiple of 15.26 mHz.

Remember, the output is periodic over the input time record only if the frequency is a multiple of the linewidth. Source triggering will not result in a stable phase for random frequencies.

Level 1, 2

These keys activate the level entry fields for tones 1 and 2. The output level is expressed in mVpk. The level may be entered in either mVpk or dBVpk. The knob always adjusts the level in mVpk. The resolution is 1 mV for levels greater than 100 mV, and 0.1 mV for levels less than 100 mV. The maximum level for each tone is 500 mV.

Return

This key returns the main source selection menu.

Configure Noise

The Configure Noise submenu allows the noise level and type to be set.

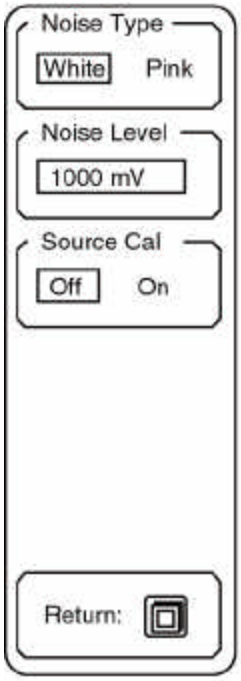

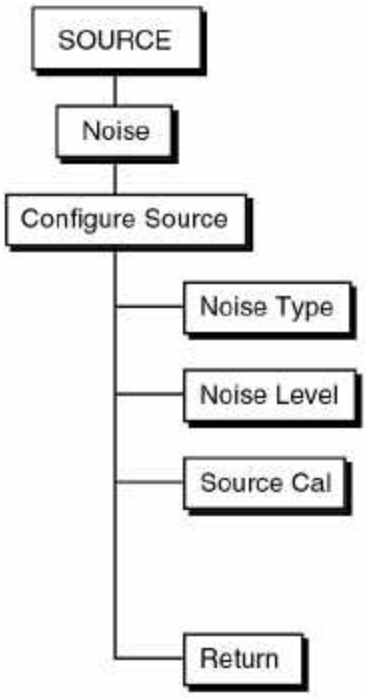

Noise Type

This key selects the noise type. White noise provides equal noise density (Volts/□Hz) from 0 to 100 kHz (regardless of the measurement span). The spectrum of white noise appears flat with constant power spectral density (PSD). Pink noise rolls off at 3 dB/oct providing equal power per octave of frequency. The spectrum of pink noise appears flat when measured using octave analysis.

Since the signal is noise and random, windowing is required to achieve a meaningful spectrum.

Source triggering is not useful since there is no stable phase information in the source.

Noise Level

This key activates the noise level entry field. The output level is expressed in mVpk. The level may be entered in either mVpk or dBVpk. The knob always adjusts the level in mVpk. The resolution is 1 mV for levels greater than 100 mV, and 0.1 mV for levels less than 100 mV.

With white noise, the noise level is approximately the peak amplitude of the noise output. There will be occasional voltage excursions beyond this level. Because of the nature of noise, the peak amplitude is not a perfectly defined quantity.

Pink noise is generated starting with white noise and then filtering it to achieve a 3 dB/oct roll-off. This filtering means that the pink noise voltag amplitude is much less than the white noise. The pink noise level is actually the white noise

level before filtering. The actual pink noise output level is much smaller than the pink noise level displayed in the menu. However, the menu still provides a relative amplitude control.

Source Cal

This key turns the Source Cal on and off. The source is digitally synthesized and passes through an output reconstruction filter. The spectrum of broadband outputs, such as noise, exhibit the passband ripple of this filter. Source Cal adjusts the input calibration to compensate for the output reconstruction filter ripple. The spectrum of the white noise output will appear flat when Source Cal is on. This is similar to a ratio measurement using a 2 channel analyzer except that the output ripple is measured at the factory and is not adjustable by the user.

Remember, the Source Cal mode compensates for variations in the output spectrum by adjusting the input calibrations. The actual signal at the Source Output is not affected.

Source Cal has NO effect unless the source is Chirp or Noise. Source Cal can only be selected in the Configure Noise or Chirp submenu.

Do not select Source Cal On and use an external signal source. The input calibrations are modified and will result in measurement errors unless the SR770 internal source is used as the test signal!

Return

This key returns the main source selection menu.

Configure Chirp

The Configure Noise submenu allows the chirp level to be set and Auto Phase to be performed.

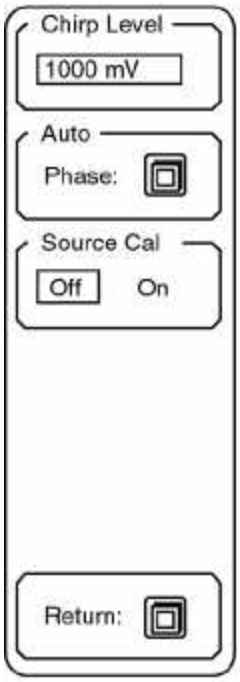

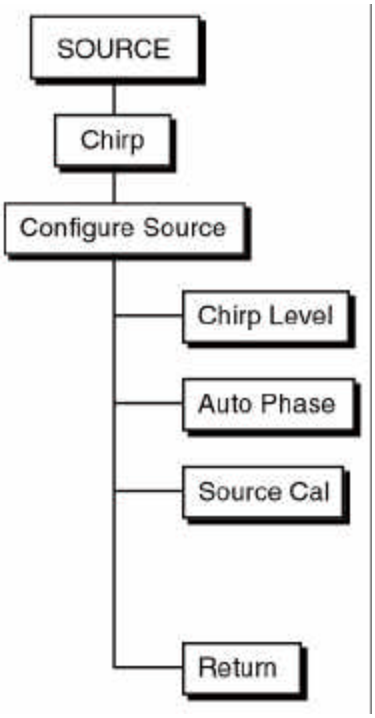

The Chirp source provides an equal amplitude sine wave at each bin of the measurement span. The phases of each sine wave are arranged so that they do not add in phase and the output does not peak. The chirp is EXACTLY periodic over a time record and requires no window. Because of cancellation, the amplitude of each sine wave is NOT constant over the time record. Windowing the time record actually removes necessary spectral information. **USE THE UNIFORM WINDOW WITH THE CHIRP SOURCE.**

Source triggering allows a stable phase curve to be measured at all spans. Remember, the source does not turn on sychronously with the input time record so the measured phase curve will be stable but with an arbitrary time delay. Turn **Auto Offset off** in the INPUT menu to avoid interrupting the input and changing the absolute phases.

Chirp Level

This key activates the chirp level entry field. The output level is expressed in mV pk. The level may be entered in either mV or dBV. The knob always adjusts the level in mV. The resolution is 1 mV for levels greater than 100 mV, and 0.1 mV for levels less than 100 mV.

The peak output level is only approximate due to the ripple in the source output reconstruction filter.

The amplitude of each frequency component is roughly -32dB relative to the peak output. If the individual frequency components were perfectly random, then each component would be 1/□400 (-26 dB) of the peak.

However, the chirp waveform is identical from time record to time record and each component has a fixed phase relative all the other components. This reduces the amplitude of each component by another 6dB (worsens the crest factor). Thus, the dynamic range of the measurement is reduced when using the chirp source.

Auto Phase

This key performs the Auto Phase function. When Source Triggering is on, the measured phases of the frequency components of the chirp are stable (but seemingly random). To measure the phase response of a device under test, a calibrated source phase curve is required. The Auto Phase function measures the current phase spectrum and stores it in memory. This reference phase spectrum is then subtracted from subsequent phase spectra to remove the phase of the chirp source. After Auto Phase, the phase spectrum will be 0° across the entire span. If a device is inserted between the source and the input, the phase spectrum will show the phase response curve of the device. This is similar to a relative phase measurement using a 2 channel analyzer except that the output reference phase is measured and stored.

Auto Phase is removed whenever the span is changed or the source type is changed. Remember, Auto Offset will interrupt the input time records and change the absolute phase. Turn Auto Offset off when measuring phase with the source!

Do not use Auto Phase and measure the phase of another signal source.

Source Cal

This key turns the Source Cal on and off. The source is digitally synthesized and passes through an output reconstruction filter. The spectrum of broadband outputs, such as chirp, exhibit the passband ripple of this filter. Source Cal adjusts the input calibration to compensate for the output reconstruction filter ripple. The spectrum of the chirp output will appear flat when Source Cal is on. If a device is inserted between the source and the input, the spectrum will show the amplitude transfer curve of the device. This is similar to a ratio measurement using a 2 channel analyzer except that the output ripple is measured at the factory and is not adjustable by the user.

Remember, the Source Cal mode compensates for variations in the output spectrum by adjusting the input calibrations. The actual signal at the Source Output is not affected.

Source Cal has NO effect unless the source is Chirp or Noise. Source Cal can only be selected in the Configure Noise or Chirp submenu.

Do not select Source Cal On and use an external signal source. The input calibrations are modified and will result in measurement errors unless the SR770 internal source is used as the test signal!

Return

This key returns the main source selection menu.

SYSTEM MENU

System

The System menu is used to configure the printer, plotter and computer interfaces, and to set the screen, sound and clock/calendar parameters. The Test submenu accesses various hardware tests. The Info submenu displays various information screens which may be useful to the user.

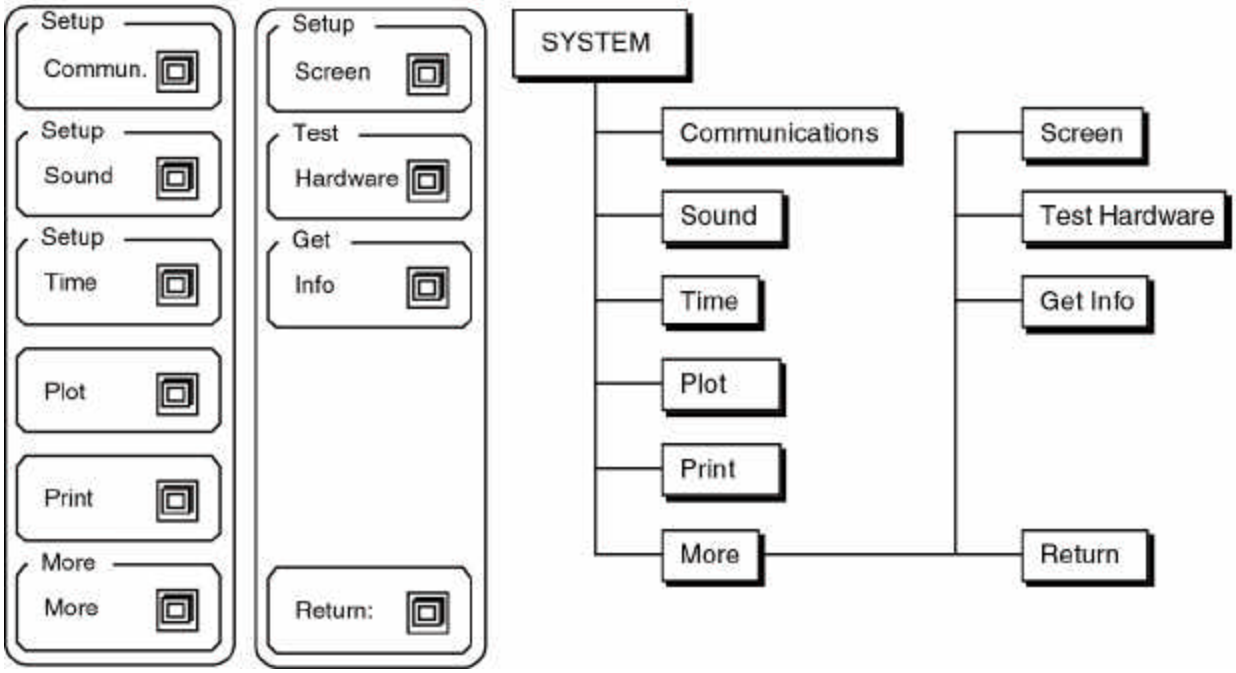

System Keys

The System menu consists of two menus, with each key activating a submenu. Use the More and Return softkeys to toggle between the two menus.

Setup Communications

Communication parameters in this submenu should not be altered while the computer interface is active.

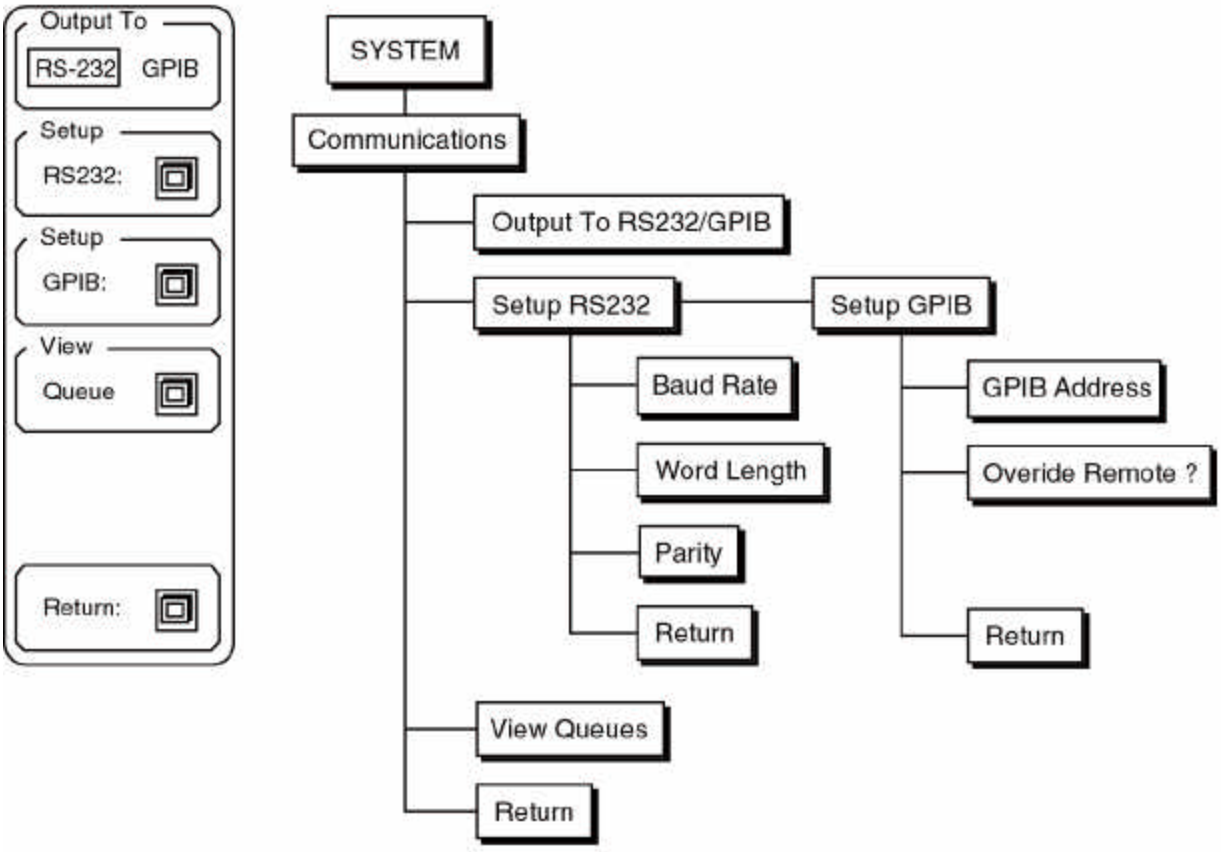

Output to RS232/GPIB

The SR770 only outputs data to one interface at a time. Commands may be received over both interfaces but responses are directed only to the interface selected by this key. Make sure that the Output interface is set correctly before attempting to program the SR770 from a computer.

Setup RS232

The Setup RS232 key activates the RS232 parameters sub menu. Baud rate, word length, and parity may be configured in this sub menu.

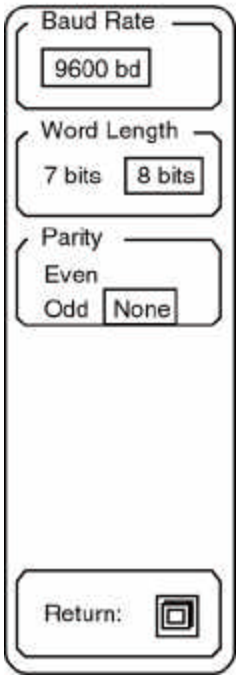

Baud Rate The Baud Rate key allows the knob to adjust the RS232 baud rate. The baud rate can be set to any standard value from 300 to 19200 baud.

Word Length This key toggles the character length. The RS232 character length can be 7 or 8 bits. 8 bits is standard.

Parity This key toggles the parity. The RS232 parity can be Even, Odd, or None.

Return The Return key will return to the Setup Communications menu.

Setup GPIB

The Setup GPIB key activates the GPIB parameters sub menu. GPIB instrument address and Remote Overide are set in this sub menu.

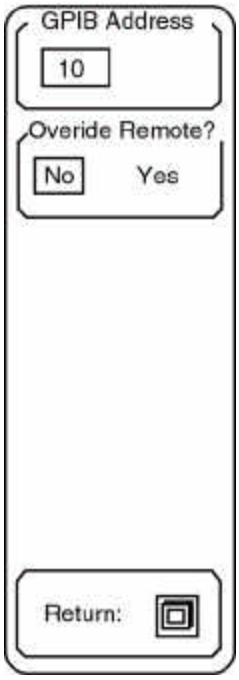

GPIB Address This key activates the GPIB Address entry field for numeric and knob entry. The instrument address can be set from 0 to 30.

Overide Remote ? In general, every GPIB interface command will put the SR770 into the REMOTE state with the front panel inactivated. To defeat this feature, set the Overide Remote ? to Yes. In this mode, the front panel is not locked out when the unit is in the REMOTE state.

If the SR770 is in the REMOTE state, the [HELP] key returns the unit to local front panel control.

Return The Return key will return to the Setup Communications menu.

View Queue

The last 256 characters received or transmitted by the SR770 may be displayed to help find programming errors. The View Queue key will display the interface buffers at the time the key is pressed. This screen is updated regularly to display new interface activity. The View Queue screen may slow down the communications between the SR770 and a host computer. In general, the View Queue screen should be displayed only when testing or debugging a host program.

The most recent data is displayed at the right of the upper line of each queue display. For example, in the screen below, the STRF?[lf] string was the most recently received command. The [lf] character is a line-feed and is the string delimiter. The most recently transmitted string is 1000.0[lf] in response to the STRF? command. The earliest command received was *IDN? and the earliest response was "Stanford Research Systems, SR770, s/n00001, ver007"[lf]. Unrecognized characters are ignored and not displayed. The terminator character on the output queue is always shown as a [lf]. When the output is directed to the RS232 interface, a carriage return [cr] is actually sent in place of the [lf].

Press any key (except [PRINT]) to restore the screen to the graph mode.

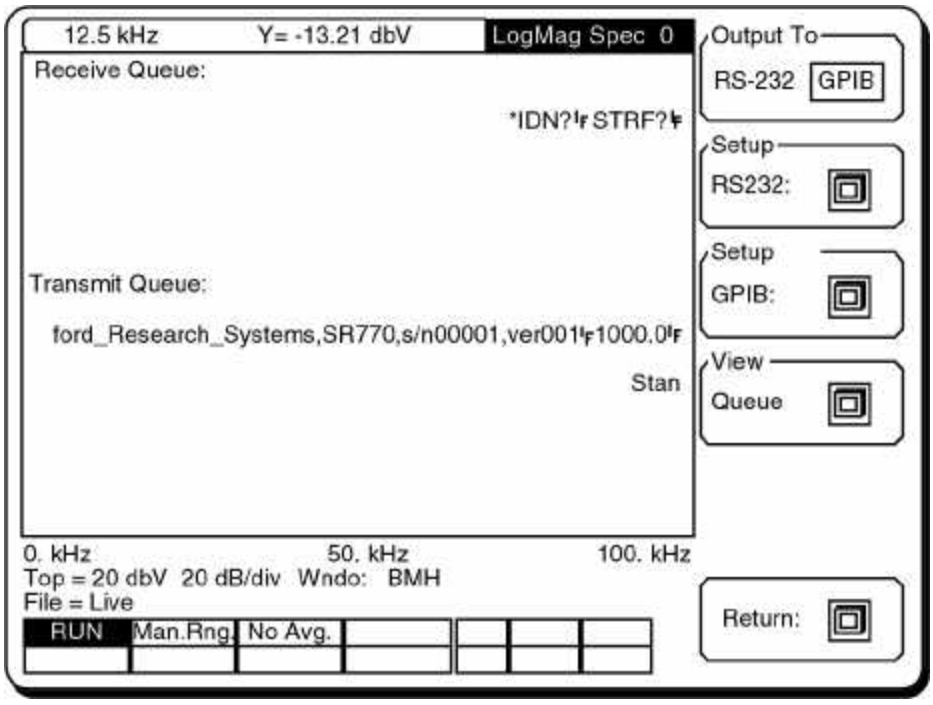

Return

The Return key will return to the main Setup menu.

Setup Sound

The Setup Sound key activates the sound submenu. Key click and alarms are enabled and disabled in this menu.

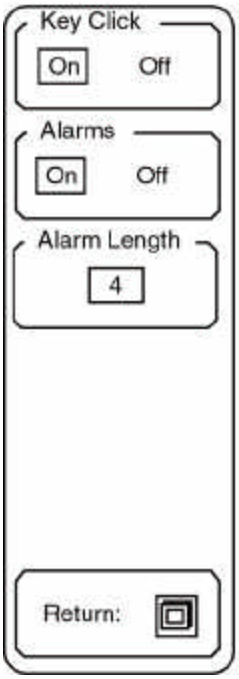

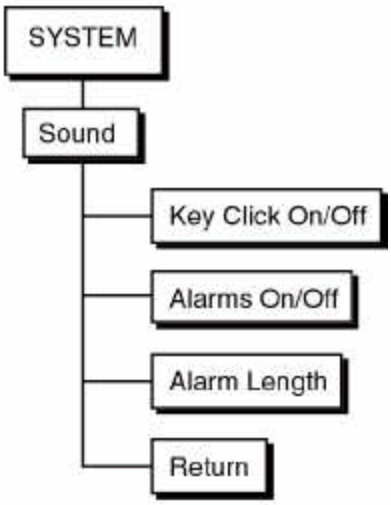

Key Click — This key turns the key click on and off.

Alarms — This key enables and disables the audible alarms. Alarms will sound whenever a front panel programming error or interface error occurs. Alarms are also used to draw the user's attention to a message.

Alarm Length — The alarm messages may be displayed for a variable length of time. Enter a number from 1 (shortest length) to 10 (longest length).

Return — The Return key will return to the main System Setup menu.

Setup Time

The Setup Time key activates the clock/calendar sub menu. The time and date are used to label all screen prints and plots as well as disk files. This menu is used to check or change the time and date.

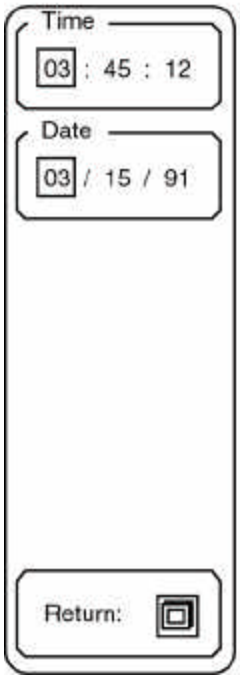

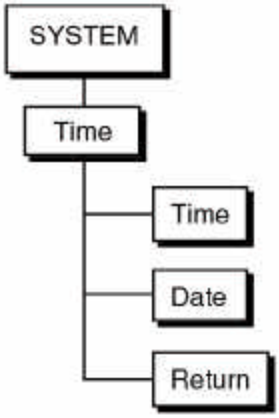

Time

The time is displayed as hours:minutes:seconds. A 24 hour format is used. This key toggles the entry field from hours to minutes to seconds. A new entry may be made using the keypad or knob. From the keypad, the clock is set when the Enter softkey is pressed. When the knob is used, the clock is set whenever the highlighted value is changed.

Date

The date is displayed as month:day:year. This key toggles the entry field from months to days to years. A new entry may be made using the keypad or knob. From the keypad, the calendar is set when the Enter Softkey is pressed. When the knob is used, the calendar is set whenever the highlighted value is changed.

Return

The Return key will return to the main System Setup menu.

Plot

The Plot menu is used to plot the screen display to an HPGL compatible plotter. Use the Setup Plotter submenu to configure the plotter interface.

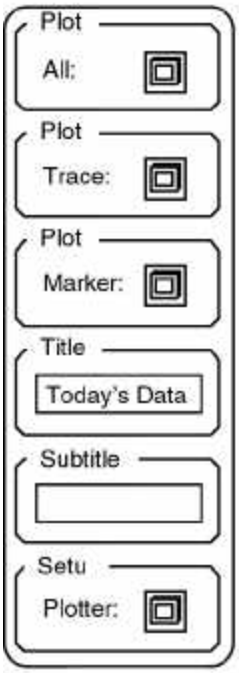

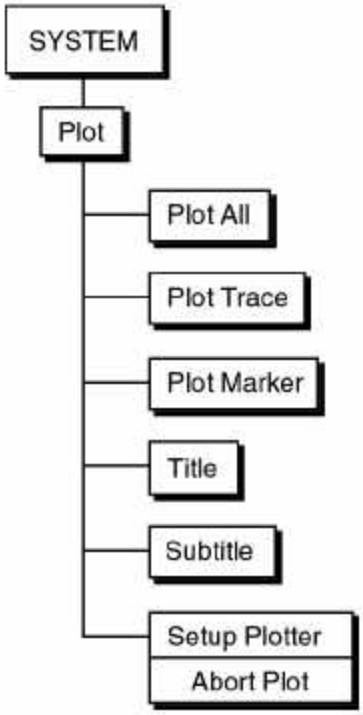

Plot All

The Plot All key generates a plot of the entire graph, including the scale and marker information. In single trace display format only the active graph is plotted. In dual trace mode both traces are plotted. Each feature uses the pen assigned in the Setup Plotter submenu. The marker is plotted only if it is presently displayed.

Plot Trace

The Plot Trace key plots only the data trace. This allows multiple data traces to be plotted on a single sheet. Traces may be made in different colors by changing pen definitions or pens between plots. In single trace display format, only the active graph is plotted. In dual trace mode, both traces are plotted.

Plot Marker

The Plot Marker key plots the marker if the marker is presently displayed on the screen. Use the Display menu to turn the marker display on and off. The marker information is plotted next to the marker. This is useful when a trace has multiple peaks which need to be marked on the plot. First Plot All with the marker at one location, then move the marker and Plot Marker.

Title

This function activates the Title entry field for alphanumeric entry. The title is added to the bottom of each plot. The title may be up to 40 characters long. The knob scrolls the title within the entry window. Use the [ALT] key to access the alphabetic keypad.

Subtitle This function activates the Subtitle entry field for alphanumeric entry. The subtitle is added to the bottom of each plot below the title. The subtitle may be up to 40 characters long. The knob scrolls the subtitle within the entry window. Use the [ALT] key to access the alphabetic keypad.

Setup Plotter Menu This key displays the Setup Plotter submenu described on the following pages. Use this menu to configure the plotter interface and pen selections. When plotting is in progress, this function switches to Plot Abort.

Plot Abort Pressing this key aborts the plot.

[SYSTEM] Use the [SYSTEM] menu key to return to the main System menu.

Setup Plotter

The Setup Plotter sub menu configures the SR770 plotter driver. Interface, plot speed, and pen definitions are set in this submenu.

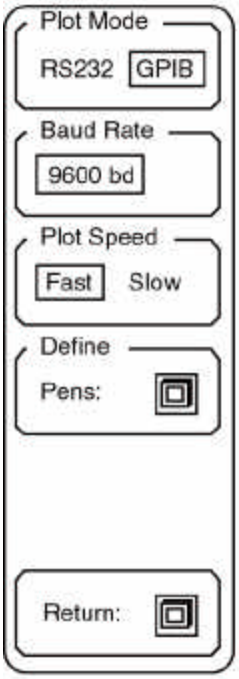

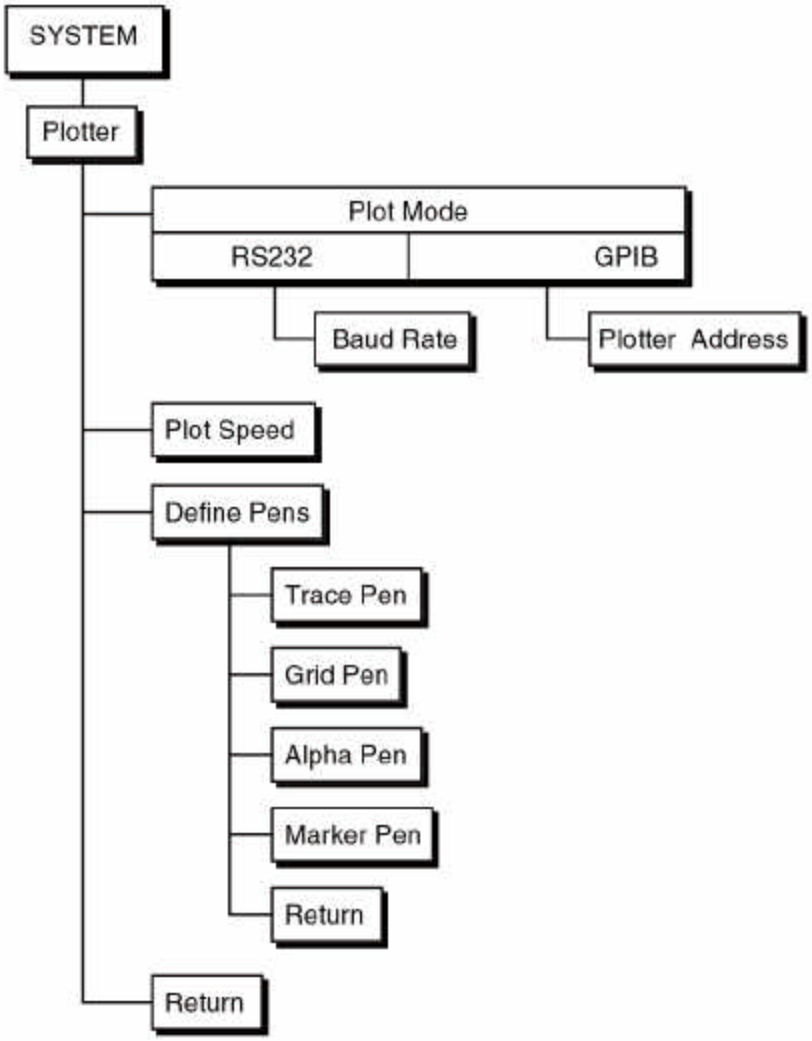

Plot Mode

The SR770 can drive either an RS232 or GPIB interface plotter. The plotter must be HP-GL compatible. This function selects which interface to use. The plotter connects to the RS232 or GPIB connector on the rear panel.

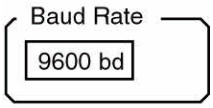

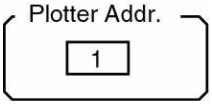

Baud Rate If the Plot Mode is RS232, then the Baud Rate for the plotter may be selected. The baud rate is adjusted using the knob and must match the baud rate of the plotter.

Plotter Addr If the Plot Mode is GPIB, then the Plotter Address must be set. The Plotter Address may be entered from the keypad or by using the knob. The Plotter Address must agree with the address of the plotter in use.

Plot Speed

This key toggles the Plot Speed. Normally, when plotting on paper, the Fast Plot Speed is used. When plotting on transparencies or other nonstandard media, the Slow plot speed may be better.

Define Pens

Many plotters have a multipen carousel. In this case, each part of the screen may be plotted using a different color pen. The Define Pens key activates a submenu in which each feature of the screen may be assigned a pen number. The allowable pen numbers are from 1 to 6. When using a single pen plotter, all features are plotted using the one pen regardless of the pen definitions.

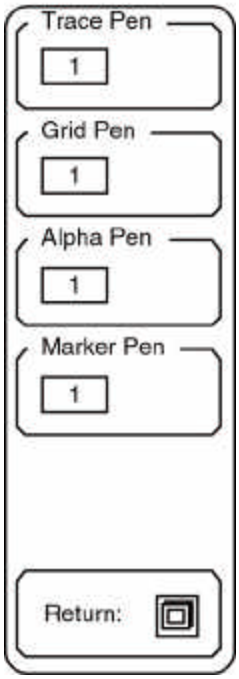

Trace Pen This field assigns a pen number to the data trace on the screen.

Grid Pen This field assigns a pen number to the graph grid.

Alpha Pen This field assigns a pen number to all of the alphanumeric labels on the screen.

Marker Pen This field assigns a pen number to the dashed marker region lines and marker.

Return This key returns to the Setup Plotter menu.

Return

The Return key will return to the main System Setup menu.

Print

The Print submenu is used to print the SR770 settings, limit tables and data tables to a printer. These printouts provide a convenient and accurate way to document measurements. The PrinterType selects the type of printer. The [PRINT] key prints the screen to the printer. If File is chosen as the printer type, then [PRINT] will save the screen image as a PCX file on the disk.

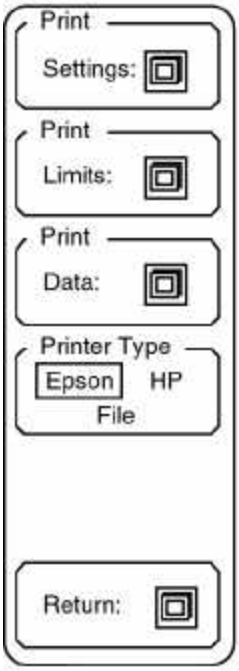

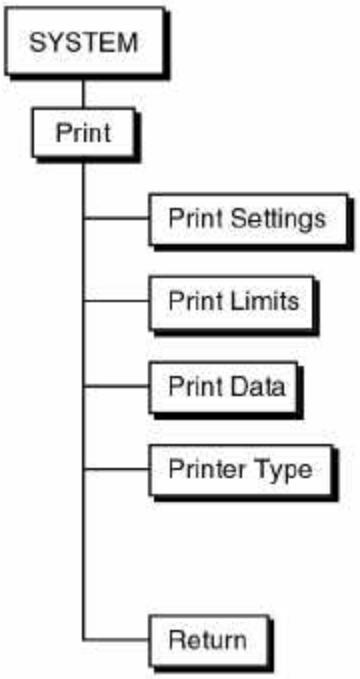

Print Settings

The Print Settings key sends a listing the settings of the analyzer to the printer. The settings listed are all those which are saved in non-volatile memory and retained when power is turned off.

Print Limits

The Print Limits key sends a listing of the limit table for the active trace to the printer. The listing is in the same format as the limit table display.

Print Data

The Print Data key sends a listing of the data table for the active trace to the printer. The data table is first updated with the current Y values. The listing is in the same format as the data table display.

Printer Type

This function toggles the Printer Type between Epson, HP and File. Epson is used for any Epson compatible graphics dot matrix printer and HP is used for an HP LaserJet laser printer or compatible. File is used to save the screen image as a PCX file on the disk. The files are automatically named SCRNXXXX.PCX. PCX files can be imported directly into many paint and draw programs on a PC. This allows SR770 screens to be easily incorporated into documents on a PC. Press the [PRINT] key to print the screen on the printer or to a file. Settings, Limits and Data Tables may NOT be saved as a PCX file.

Return This key returns to the System menu.

Setup Screen

The Setup Screen submenu is used to adjust the position of the display on the screen. The display area may be moved left, right, up and down.

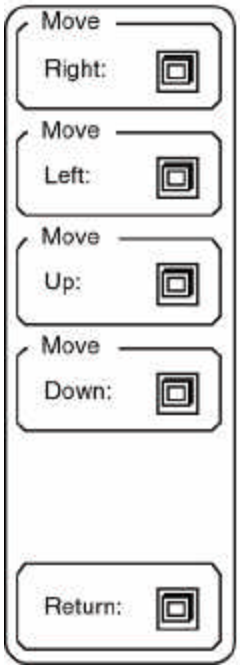

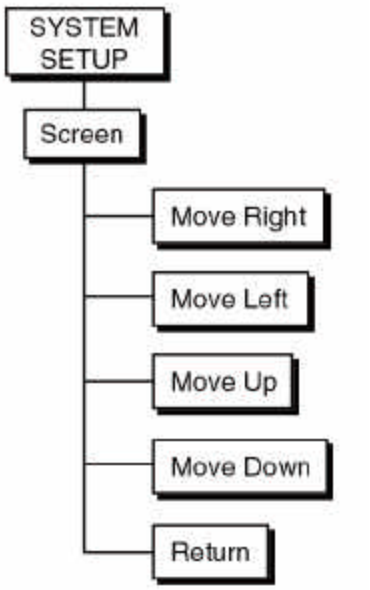

The screen position is stored in non-volatile memory and is retained when the power is turned off. To restore the screen to the default position, power the unit on with the [<-} (backspace) key pressed.

Move Right This function moves the display to the right on the screen.

Move Left This function moves the display to the left on the screen.

Move Up This function moves the display up on the screen.

Move Down This function moves the display down on the screen.

Return The Return key will return to the main Setup menu.

Test Hardware

The Test submenu allows the user to test various features of the SR770 such as the keypad, knob, screen, memory, etc. Use the More softkey to select the second test menu screen.

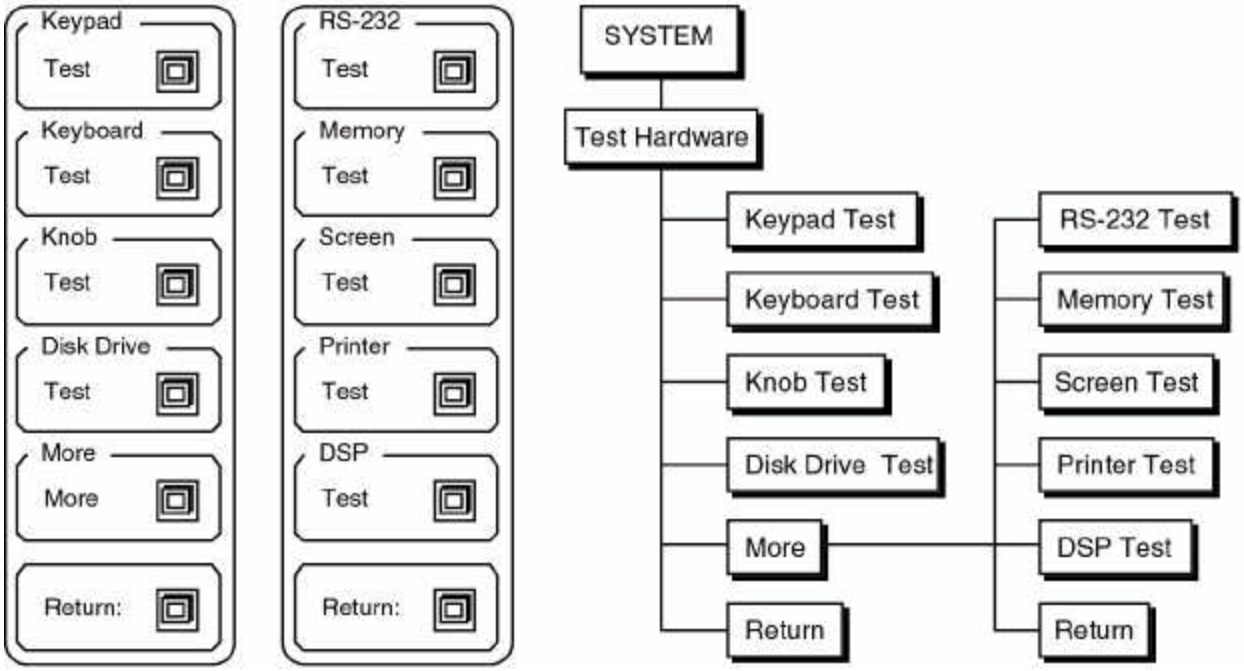

Keypad Test

This key activates the keypad test screen. The keypad test screen displays a map of the keypad with each key represented by a small square. Pressing each key will highlight the corresponding square. When all squares are highlighted, the test is complete.

Keyboard Test

This key activates the keyboard test screen. Characters typed on an attached PC keyboard (in PC or 8088 mode) will be displayed on the test screen. If the displayed characters are accurate, then the keyboard interface is functioning and the keyboard is configured correctly. If not, check that the keyboard is in the correct mode. Many keyboards have a switch on the bottom to select PC (8088) or AT (80286) mode.

Knob Test

This key activates the knob test screen. A circle with a marker is displayed. Select one of the 4 speeds displayed in the menu. Turning the knob will cause the marker to move around the circle verifying knob action and direction. Using speed 1 or 2 is best when checking direction of movement.

Disk Drive Test

Pressing this key activates the disk drive test screen. **Continuing with this test will destroy any data on the disk currently in the drive.** Therefore remove any disk containing data from the drive and insert a scratch disk. This test will check the controller, format the disk, and read and write data to the disk. The entire test takes approximately 2 minutes.

Use the Return function to skip this test and return to the previous menu.

RS-232 Test

Pressing this key activates the RS232 test screen. A special loop back adapter is required to complete this test. The loop back adapter is simply a mating connector with pins 2 and 3 connected so characters transmitted by the interface will be received by the instrument.

Memory Test

The Memory Test key activates a memory test sub menu. Select the desired memory test.

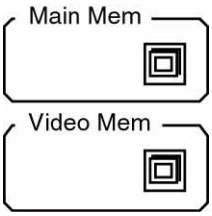

Main Memory Pressing this key tests the program ROM and data RAM on the CPU board. The data acquisition memory is not tested. See the Test and Calibration section for more information on testing the data acquisition hardware.

Video Memory Pressing this key tests the video display RAM. A video pattern will scroll through the display while the test is done.

Return The Return key will return to the Test menu.

Screen Test

This key displays a test pattern on the screen.

Printer Test

The Printer Test key activates a sub menu.

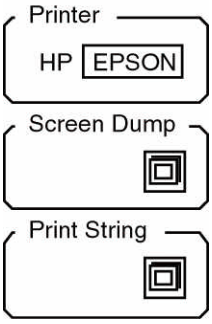

Printer Type The Printer Type key selects the type of printer attached to the parallel printer port. Any Epson compatible graphics printer or HP LaserJet compatible printer is supported.

Screen Dump Pressing this key will print the graphics screen on the printer. This action is the same as using the [PRINT] key.

Print String Pressing this key prints a text string to the printer. If the Print String test works but the Screen Dump test fails, then the printer probably does not support the Epson or HP LaserJet graphics mode.

Return The Return key will return to the Test menu.

DSP Test

Pressing this key tests the two Digital Signal Processors and their data memories.

Return

Pressing this key returns to the first Test submenu. Pressing Return again displays the second System Setup menu.

Get Info

The Get Info submenu displays various information screens which may be helpful to the user.

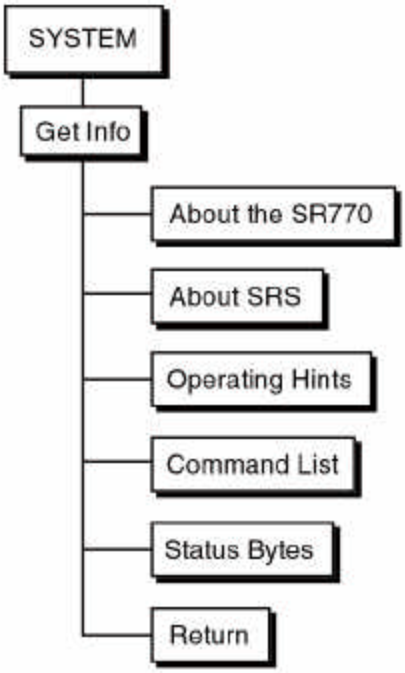

About the SR770 This key displays the SR770 specifications.

About SRS This key displays information about Stanford Research Systems, Inc.

Operating Hints This key displays information about the use of the SR770.

Command List This key displays a list of the remote commands available.

Status Bytes This key displays an explanation of the remote programming status bytes.

Fundamental Constants This key displays a table of fundamental constants.

Store Recall

The Store and Recall menu is used to save and recall data and settings to and from disk. The Disk Utilities submenu can erase files and format blank disks. Files are saved as DOS files and can be read by a DOS compatible computer with a 3.5" disk drive. The file format is described in the Remote Programming section.

Note:
The SR770 uses double sided, high density (DS/HD) disks.

The maximum number of files allowed on a disk is 224. This is the DOS limitation on the number of directory entries in the root directory.

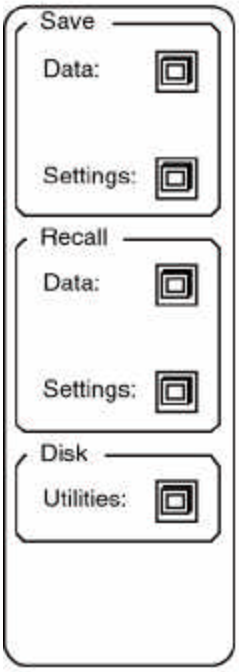

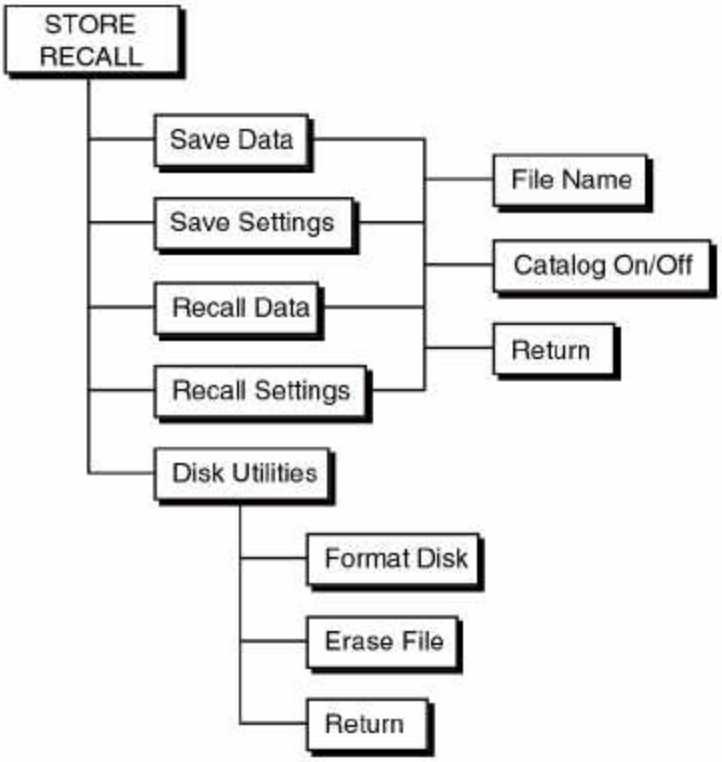

Store Recall Keys

Each softkey in this menu activates a submenu. The submenus are described in detail on the following pages.

STORE RECALL MENU

Save Data

The Save Data submenu is used to save the active trace data and the associated limit and data tables. The graph parameters, frequency span, measurement, display, units and window are all saved with the data.

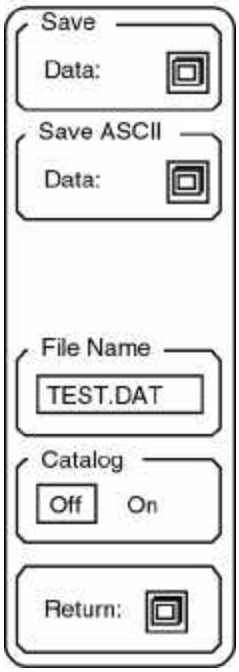

Save Data Pressing this key will save the active trace data and associated parameters to the file specified in the File Name field.

Save ASCII Data Pressing this key will save the active trace data in ASCII format. Only the trace data is saved. The data is saved as "0.00, 1.23, <cr> <lf> 1.00e3, 4.56, <cr> <lf> 2.00e3, 7.89, <cr> <lf> ..." where "0.00,1.23" is the frequency (or time) and data point for the first bin, "1.00e3, 4.56" is the frequency (or time) and data point for the second bin, etc. for a total of 400 bins (15 or 30 bins in octave analysis). The data assumes the units of the current display.

The ASCII format is a convenient way to transfer data to other programs on a PC. The file is a simple DOS text file.

File Name This key activates the File Name entry field. File names are entered using the keypad and alternate keypad. The [ALT] key allows letters to be entered. DOS file name conventions must be followed, i.e. file names are 8 characters or less with an extension of up to 3 characters. "ABCDEFGH.XYZ" is a valid file name. DOS sub-directories are not supported.

All files are saved to the root directory.

Catalog On/Off This key toggles the file catalog display screen on and off. The file catalog display lists all files currently in the root directory. A sample catalog screen is shown below.

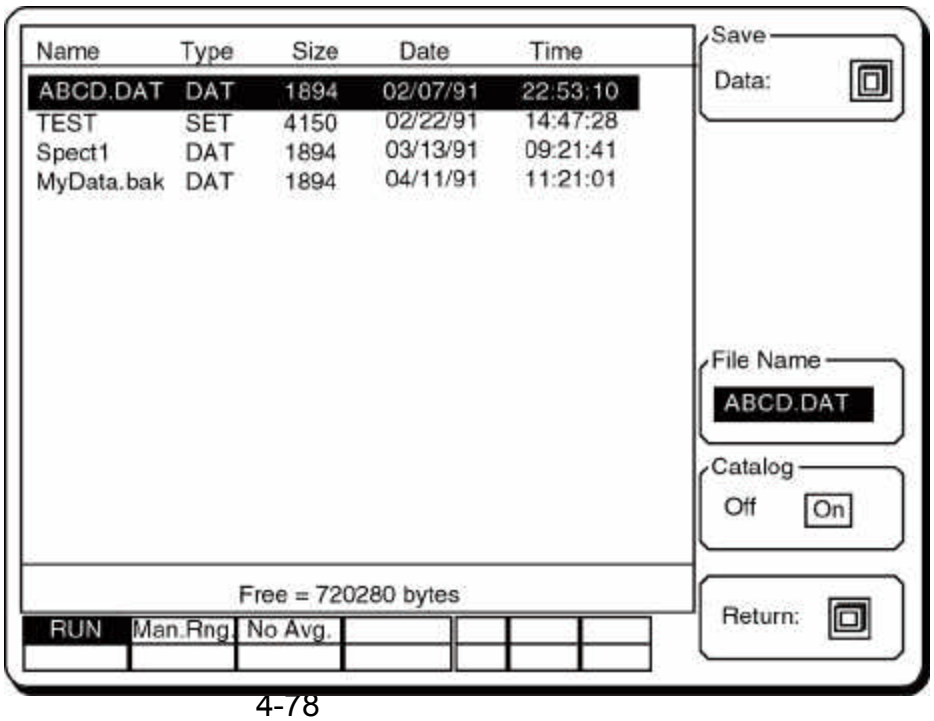

The first file will be highlighted and the file name will appear in the File Name field. Activating the cursor by pressing the [MARKER] key allows the knob to scroll through the directory. The highlighted file name will be copied into the File Name field. If the Save Data key is now pressed, the data will be saved under an existing file name and the previous version of that file will be lost. To create a new file name, use the File Name key.

Directory entries made by the SR770 also have a type field shown in the catalog display. Files with type SET are settings and type DAT are trace data. The file type is not an extension but is information stored in the directory on the disk. Only files created by the SR770 have a type. Files created and saved on a DOS computer will not have a type displayed. The file type is not necessary, it is only an aid to identifying files.

Return The Return key will return to the main Store/Recall menu. Return also removes the catalog display screen and restores the graph.

STORE RECALL MENU

Save Settings

The Save Settings submenu is used to save the analyzer settings to a disk file. The settings include all parameters which are set with the menus.

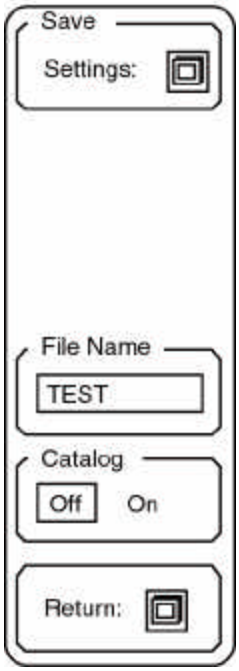

Save Settings Pressing this key will save the current analyzer settings to the file specified in the File Name field.

File Name This key activates the File Name entry field. File names are entered using the keypad and alternate keypad. The [ALT] key allows letters to be entered. DOS file name conventions must be followed, i.e. file names are 8 characters or less with an extension of up to 3 characters. "ABCDEFGH.XYZ" is a valid file name. DOS sub-directories are not supported. All files are saved to the root directory.

Catalog On/Off This key toggles the file catalog display screen on and off. The use of this key is identical to the Catalog On/Off function in the Save Data submenu describe previously.

Return The Return key will return to the main Store/Recall menu. Return also removes the catalog display screen and restores the graph.

Recall Data

The Recall Data submenu is used to read data from a disk file onto the active trace graph. Note that the graph parameters, measurement, display, units and window are all recalled with the data and appear in the menus for the active trace. The graph will be labelled with the recalled frequency span but the Frequency menu will still display the "live" settings. The file name appears below the graph. The Limit and Data tables are also recalled with the data.

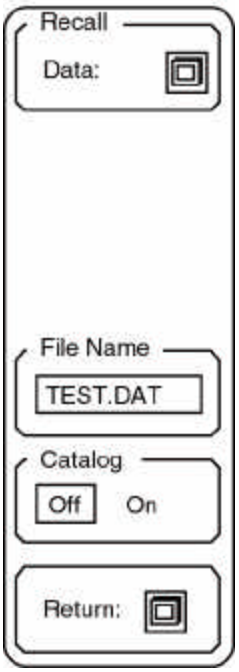

Recall Data Pressing this key will recall data and limit and data tables from the file specified in the File Name field.

If the file specified is not on the disk or is not a data file, then an error message will appear.

File Name This key activates the File Name entry field. File names are entered using the keypad and alternate keypad. The [ALT] key allows letters to be entered. DOS file name conventions must be followed, i.e. file names are 8 characters or less with an extension of up to 3 characters. "ABCDEFGH.XYZ" is a valid file name. DOS sub-directories are not supported. All files are read from the root directory.

Catalog On/Off This key toggles the file catalog display screen on and off. The use of this key is identical to the Catalog On/Off function in the Save Data submenu describe previously.

Return The Return key will return to the main Store/Recall menu. Return also removes the catalog display screen and restores the graph.

STORE RECALL MENU

Recall Settings

The Recall Settings submenu is used to recall the analyzer settings from a disk file. The settings include all parameters which are set with the menus.

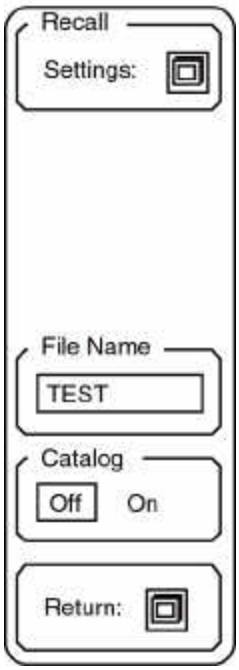

Recall Settings Pressing this key will read the settings information from the file specified in the File Name field.

File Name This key activates the File Name entry field. File names are entered using the keypad and alternate keypad. The [ALT] key allows letters to be entered. DOS file name conventions must be followed, i.e. file names are 8 characters or less with an extension of up to 3 characters. "ABCDEFGH.XYZ" is a valid file name. DOS sub-directories are not supported. All files are read from the root directory.

Catalog On/Off This key toggles the file catalog display screen on and off. The use of this key is identical to the Catalog On/Off function in the Recall Trace sub menu above.

Return The Return key will return to the main Store/Recall menu. Return also removes the catalog display screen and restores the graph.

Disk Utilities

The Disk Utilities submenu contains the Format Disk and Erase File functions. **These functions should be used with care since disk data will be erased**. The catalog screen is displayed with this submenu if a formatted disk is in the drive.

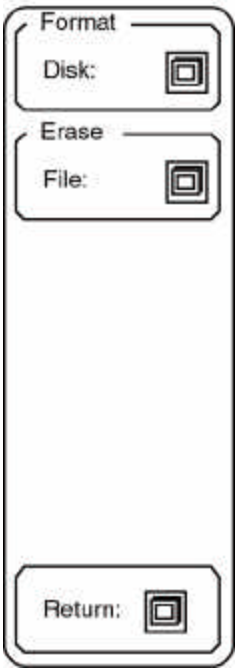

Format Disk Pressing this key will format the disk. Formatting a disk involves erasing all information on the disk and rewriting the directory**. Formatting a disk destroys all data presently on the disk**. Use caution when choosing this function.

Disk capacity is 1.44 MB formatted. The maximum number of directory entries is 224. This is the DOS limitation on the number of files allowed in the root directory.

Erase File This function will erase the highlighted file. To select a file, activate the cursor with the [MARKER] key and use the knob to scroll the file entries. Make sure the selected file is the correct file **before** pressing this key.

Return The Return key will return to the main Store/Recall menu. Return also removes the catalog display screen and restores the graph.

DEFAULT SETTINGS

If the [<-] (backspace) key is held down when the power is turned on, the analyzer settings will be set to the defaults shown below rather than the settings that were in effect when the power was turned off.

The default settings may also be recalled using the *RST command over the computer interface. In this case, the communications parameters and status registers are not changed.

ACTIVE TRACE	0
ANALYZER	Running
AUTO RANGE	Off (Manual Range)
FREQUENCY	
Span	100 kHz
Linewidth	250 Hz
Acq. Time	4 ms
Start Freq.	0.0 Hz
Center Freq.	50.0 kHz
MEASURE	
Measurement	Spectrum
Display	Log Mag.
Units	dBVolts
Window	BMH
Calculator Operation	+
Argument Type	Constant
Argument	0.0
DISPLAY	
Format	Single
Marker	On
Marker Width	Norm
Marker Seeks	Max
Grid	8 divisions
Graph Style	Line
INPUT	
Input Source	A
Grounding	Float
Coupling	AC
Input Range	0 dBV
Trigger	Continuous
Trigger Level	0.00 %
Trigger Slope	Positive
Trigger Delay	0
Arming Mode	Auto
Auto Offset	On
SCALE	
Top Reference	20
Bottom Reference	-140
Y/Div	20
Expand X	None
X Axis	Linear
ANALYZE	
Analysis Type	None
AVERAGE	
Averaging	Off
Number of Averages	2
Average Type	RMS
Average Mode	Linear
Overlap	0.0 % (max for span)
SOURCE	
Type	Off
Sine Frequency	1.00 kHz
Sine Level	1000 mV
Tone Freq 1	1.00 kHz
Tone Level 1	500 mV
Tone Freq 2	9.00 kHz
Tone Level 2	500 mV
Noise Type	White
Noise Level	1000 mV
Chirp Level	1000 mV
Source Cal	On (Chirp and Noise only)
SYSTEM	
Output To	GPIB
RS-232 Baud Rate	9600
RS-232 Word Length	8 bits
RS-232 Parity	None
GPIB Address	10
Override Remote	No
Key Click	On
Alarms	On
Plot Mode	RS-232
Plotter Baud Rate	9600
Plotter GPIB Address	1
Plot Speed	Fast
Trace Pen	1
Grid Pen	1
Alpha Pen	1
Marker Pen	1
Printer Type	Epson
STORE/RECALL	
File Name	None

DEFAULT SETTINGS

STATUS ENABLE REGISTERS	Cleared

REMOTE PROGRAMMING

INTRODUCTION

The SR770 FFT Spectrum Analyzer may be remotely programmed via either the RS232 or GPIB (IEEE-488) interfaces. Any computer supporting one of these interfaces may be used to program the SR770. Both interfaces are receiving at all times, however, **the SR770 will send responses only to the interface specified in the System Setup menu** (Output To RS232/GPIB function). Use the OUTP command at the beginning of every program to direct the responses to the correct interface. All front panel features (except power) may be controlled.

COMMUNICATING WITH GPIB

The SR770 supports the IEEE-488.1 (1978) interface standard. It also supports the required common commands of the IEEE-488.2 (1987) standard. Before attempting to communicate with the SR770 over the GPIB interface, the SR770's device address must be set. The address is set in the Setup GPIB menu and may be set between 0 and 30.

COMMUNICATING WITH RS232

The SR770 is configured as a DCE (transmit on pin 3, receive on pin 2) device and supports CTS/DTR hardware handshaking. The CTS signal (pin 5) is an output indicating that the SR770 is ready, while the DTR signal (pin 20) is an input that is used to control the SR770's data transmission. If desired, the handshake pins may be ignored and a simple 3 wire interface (pins 2,3 and 7) may be used. The RS232 interface baud rate, number of data bits, and parity must be set. These are set in the Setup RS232 menu.

STATUS INDICATORS AND QUEUES

To assist in programming, the SR770 has 4 interface status indicators which are displayed at the bottom of the screen. The RS232/GPIB Activity indicator flashes whenever a character is received or transmitted over either interface. The ERR indicator flashes when an error, such as an illegal command, or parameter out of range, has been detected. The REM indicator is on whenever the SR770 is in a remote state (front panel locked out). The SRQ indicator is on when the SR770 generates a service request. SRQ stays on until a serial poll is completed.

To help find program errors, the SR770 can display the interface buffers on the screen. This screen is activated by the View Queue function in the Setup Communications menu. The last 256 characters received and transmitted by the SR770 are displayed.

COMMAND SYNTAX

Communications with the SR770 uses ASCII characters. Commands may be in either UPPER or lower case and may contain any number of embedded space characters. A command to the SR770 consists of a four character command mnemonic, arguments if necessary, and a command terminator. The terminator must be a linefeed <lf> or carriage return <cr> on RS232, or a linefeed <lf> or EOI on GPIB. No command processing occurs until a command terminator is received. Commands function identically on GPIB and RS232 whenever possible. Command mnemonics beginning with an asterisk "*" are IEEE-488.2 (1987) defined common commands. These commands also function identically on RS232. Commands may require one or more parameters. Multiple parameters are separated by commas (,).

Multiple commands may be sent on one command line by separating them with semicolons (;). The difference between sending several commands on the same line and sending several independent commands is that when a command line is parsed and executed, the entire line is executed before any other device action proceeds.

There is no need to wait between commands. The SR770 has a 256 character input buffer and processes commands in the order received. If the buffer fills up, the SR770 will hold off handshaking on the GPIB and attempt to hold off handshaking on RS232. Similarly, the SR770 has a 256 character output buffer to store output until the host computer is ready to receive it. If either buffer overflows, both buffers are cleared and an error reported.

The present value of a particular parameter may be determined by querying the SR770 for its value. A query is formed by appending a question mark "?" to the command mnemonic and omitting the desired parameter from the command. Values returned by the SR770 are sent as a string of ASCII characters terminated by a carriage return <cr> on RS232 and by a line-feed <lf> on GPIB. If multiple queries are sent on one command line (separated by semicolons, of course) the answers will be returned individually, each with a terminator.

Examples of Command Formats

TRSL 0<lf>	Set trigger slope to positive
CTRF 10E3 <lf>	Set the center frequency to 10000 Hz (10 kHz)
*IDN? <lf>	Queries the device identification
STRT <lf>	Starts data acquisition (same as [START] key)
DISP? -1 <lf>	Queries the display type of the active trace

INTERFACE READY AND STATUS

The Interface Ready bit in the Serial Poll Status Byte signals that the SR770 is ready to receive and execute a command. When a command is received, this bit is cleared indicating that an operation is in progress. While the operation is in progress, no other commands will be processed. Commands received during this time are stored in the buffer to be processed later. Only GPIB serial polling will generate a response while a command is in progress. When the command execution terminates, the Interface Ready bit is set again and new commands will be processed. Since most commands execute very quickly, the host computer does not need to continually check the Interface Ready bit. Commands may be sent one after another and they will be processed immediately.

However, some commands, such as file commands and math operations, may require a long time to execute. In addition, the host program may need to check that these operations executed without error. In these cases, after the command is sent, the Status Bytes should be queried.

When using the GPIB interface, serial polling may be used to check the Interface Ready bit in the Serial Poll Byte while an operation is in progress. After the Interface Ready bit becomes set, signalling the completion of the command, then the ERR bit may be checked to verify successful completion of the command.

If the RS232 interface is used, or serial polling is not available, then the *STB?, *ESR?, ERRS?, and FFTE? status query commands may be used to query the Status Bytes. Since the SR770 processes one command at a time, the status query will not be processed until the previous operation is finished. Thus a response to the status query in itself signals that the previous command is finished. The query response may then be checked for various errors.

For example, the command line SVTR;ERRS? <lf> will save the data to disk and return the Error Status Byte when finished. The Disk Error bit may be checked to make sure that the Save Trace (SVTR) command terminated without error. Since the Save Trace command may take a long time to execute, it is important that the host computer interface does not time out while waiting for the response to the ERRS? query. In the case where the host interface times out before the ERRS? response, the host program must wait before sending the ERRS? query.

GET (GROUP EXECUTE TRIGGER)

The GPIB bus command GET will have the same effect as a trigger. If the analyzer is in a triggered mode and awaiting a trigger, and the trigger is armed, then the GET bus command will trigger a time record. If the trigger mode is continuous or the trigger is not armed, then the GET command does nothing. To setup the analyzer in an awaiting trigger, simply choose external TTL trigger and leave the trigger unconnected.

DETAILED COMMAND LIST

The four letter mnemonic in each command sequence specifies the command. The rest of the sequence consists of parameters. Multiple parameters are separated by commas. Parameters shown in { } are optional or may be queried while those not in { } are required. Commands that may be queried have a question mark in parentheses (?) after the mnemonic. Commands that may ONLY be queried have a ? after the mnemonic. Commands that MAY NOT be queried have no ?. Do not send ( ) or { } as part of the command.

The variables are defined as follows.

g	trace number (0=Trace0, 1=Trace1, -1=Active Trace)
i, j	integers
x, y	real numbers
f	frequency
s	string

All numeric variables may be expressed in integer, floating point or exponential formats (i.e., the number five can be either 5, 5.0, or .5E1). Strings are sent as a sequence of ASCII characters.

NOTE:
All responses are directed to the interface selected in the Setup Communications Output To RS232/GPIB function, regardless of which interface received the query. Use the OUTP command to select the correct interface at the beginning of every program.

NOTE:
Any set command with a 'g' parameter equal to 0 or 1 will make trace0 or trace1 the active trace first, then set the desired parameter. A query command will not switch the active trace.

For example, if the active trace is trace0, the MEAS 1,1 command will make trace1 the active graph and set its measurement type to PSD. If the active trace is trace0, the MEAS?1 query will return the measurement type for trace1 without changing the active trace.

FREQUENCY COMMANDS

The frequency and octave commands set or query the "live" settings. The span of a recalled or stopped-invalid trace is not queried by these commands.

The frequency span commands, SPAN, STRF and CTRF should be used if the measurement type is not octave analysis for either trace. If either trace is measuring octaves, then the frequency commands will result in an error.

SPAN (?) {i} The SPAN command sets or queries the frequency span. The parameter i selects a span as shown below.

i	span	i	span
0	191 mHz	10	195 Hz
1	382 mHz	11	390 Hz
2	763 mHz	12	780 Hz
3	1.5 Hz	13	1.56 kHz
4	3.1 Hz	14	3.125 kHz
5	6.1 Hz	15	6.25 kHz
6	12.2 Hz	16	12.5 kHz
7	24.4 Hz	17	25 kHz
8	48.75 Hz	18	50 kHz
9	97.5 Hz	19	100 kHz

STRF (?) {f} The STRF command sets or queries the start frequency of the span. The parameter f is a frequency (real number of Hz). The value of f will be rounded according to the resolution of the current span. Values of f which would cause the span to exceed the 0 to 100 kHz range, are set to the allowable value closest to f.

CTRF (?) {f} The CTRF command sets or queries the center frequency of the span. The parameter f is a frequency (real number of Hz). The value of f will be rounded according to the resolution of the current span. Values of f which would cause the span to exceed the 0 to 100 kHz range, are set to the allowable value closest to f.

The octave commands, OTYP, OSTR and WTNG should be used if one of the traces is measuring octave analysis. If neither trace is measuring octaves, then the octave commands will result in an error.

OTYP (?) {i} The OTYP command sets or queries the type of octave analysis. The parameter i=0 selects 15 bands and i=1 selects 30 bands.

OSTR (?) {i} The OSTR command sets or queries the starting band for octave analysis. The starting band may be programmed from $-2 \leq i \leq 30$ subject to the limit that the starting band plus the number of bands (15 or 30) is less than 50. If the parameter i exceeds these limits, then the value will be set to the maximum or minimum allowed value.

WTNG (?) {i} The WTNG command sets or queries the weighting function for octave analysis. The parameter i=0 selects no weighting and i=1 selects A-weighting.

MEASUREMENT COMMANDS

When setting the trace type, set the measurement first, then the display type, then the units. This will change the trace type regardless of the previous settings. This is because measurements take priority over the display type.

MEAS (?) g {,i}

The MEAS command sets or queries the measurement type for trace g. The parameter i selects Spectrum (i=0), PSD (i=1), Time Record (i=2), or Octave Analysis (i=3). If the display type is incompatible with the new measurement, then the display will be set to log magnitude.

DISP (?) g {,i}

The DISP command sets or queries the display type for trace g. The parameter i selects Log Magnitude (i=0), Linear Magnitude (i=1), Real Part (i=2), Imaginary Part (i=3), or Phase (i=4). Not all display types are available for all measurement types. The table below lists which display types may be programmed.

Measurement	Possible Displays
Spectrum	All
PSD	Log Mag, Lin Mag
Time Record	All
Octave	Log Mag

UNIT (?) g {,i}

The UNIT command sets or queries the display units for trace g. The parameter i selects Volts Pk (i=0), Volts RMS (i=1), dBV (i=2), or dBVrms (i=3). If Engineering Units are being used, then EU Pk, EU RMS, dBEU, and dBEUrms are selected. If Phase is being displayed, then i selects Degrees (i=0) or Radians (i=1).

VOEU (?) g {,i}

The VOEU command sets or queries the unit type for trace g. i=0 selects Volts and i=1 selects EU's.

EULB (?) g {,s}

The EULB command sets or queries the EU label for trace g. The string s is a string of up to 6 characters.

EUVT (?) g {,x}

The EUVT command sets or queries the EU scaling for trace g. The EUVT x command sets the scaling to x EU's per Volt.

WNDO (?) g {i}

The WNDO command sets or queries the windowing function. The parameter i selects Uniform (i=0), Flattop (i=1), Hanning (i=2), or Blackman-Harris (i=3).

When querying the window, the WNDO? g command queries the window of the trace g. This may differ from the "live" window because the trace may be a recalled file with its own window.

When setting the window, the WNDO g,i command sets the "live" window for both traces. The parameter g is required but both "live" trace windows are affected.

DISPLAY and MARKER COMMANDS

ACTG (?) {i} The ACTG command sets or queries the active trace number. The parameter i selects Trace0 (i=0) or Trace1 (i=1).

FMTS (?) i The FMTS command sets or queries the display format. The parameter i selects Single (i=0) or Up/Dn (i=1).

GRID (?) g {,i} The GRID command sets or queries the grid on/off condition for trace g. The parameter i selects Off (i=0), 8 (i=1) or 10 (i=2) divisions per screen.

FILS (?) g {,i} The FILS command sets or queries the graph style for trace g. The parameter i selects Line (i=0) or Fill (i=1).

MRKR (?) g {,i} The MRKR command sets or queries the marker on/off/track state for trace g. The parameter i selects Off (i=0), On (i=1) or Track (i=2).

MRKW (?) g {,i} The MRKW command sets or queries the marker width for trace g. The parameter i selects Norm (i=0), Wide (i=1), or Spot (i=2).

MRKM (?) g {,i} The MRKM command sets or queries the marker seek mode for trace g. If i=0 the marker seeks the maximum, if i=1 the marker seeks the minimum, and if i=2 the marker seeks the mean.

MRLK (?) {i} The MRLK command sets or queries the marker linkage Off/On state. The parameter i selects Off (i=0) or On (i=1).

MBIN g,i The MBIN command moves the trace g marker region to bin i where $0 \leq i \leq 399$. The marker region will be centered on bin i. The marker will seek the max, min, or mean within the region as set by the marker seek mode.

MRKX ? g The MRKX? command queries the trace g marker X position. The value returned is the same as the marker readout on the screen.

MRKY ? g The MRKY? command queries the trace g marker Y position. The value returned is the same as the marker readout on the screen.

MRPK The MRPK command performs the same function as pressing the [MARKER MAX/MIN] key. The marker region will be centered around the maximum or minimum data value on the screen depending upon the marker seeks mode. Only the marker on the active graph is affected.

MRCN The MRCN command performs the same function as pressing the [MARKER CENTER] key. The center frequency of the span is set to the marker frequency on the active graph. The span is decreased if necessary to accomplish this.

MRRF The MRRF command sets the marker offset for the active graph equal to the marker position (both X and Y) and turns the marker offset on (if it was off). Similar to the [MARKER REF] key.

MROF (?) g {,i} The MROF command sets or queries the marker offset Off/On state. The parameter i selects Off (i=0) or On (i=1).

MROX (?) g {,x} The MROX command sets or queries the marker X offset. The offset is a unitless real number usually interpreted as a frequency.

MROY (?) g {,x}

The MROY command sets or queries the marker Y offset. The offset is a unitless real number.

PKLF

The PKLF command moves the marker to the next peak to the left.

PKRT

The PKRT command moves the marker to the next peak to the right.

MSGS s

The MSGS s command displays string s in a message window on the screen. An alarm is also sounded. The string s may be up to 30 characters long. All characters are converted to upper case and spaces are ignored. To embed a space in the string, use the HEX value 10H (16 decimal) or and underscore (_). For example, the MSGSHELLO_USER command will display the message HELLO_USER on the screen.

SCALE COMMANDS

AUTS g

The AUTS command performs the Auto Scale function on trace g. This function is the same as pressing the [AUTO SCALE] key with trace g active. The AUTS command affects the TREF, BREF and YDIV parameters below.

TREF (?) g {,x}

The TREF command sets or queries the top reference for trace g. The TREF g,x command sets the top reference to x where x is a real number which is assigned the units of the display. This command will also affect the bottom reference.

BREF (?) g {,x}

The BREF command sets or queries the bottom reference for trace g. The BREF g,x command sets the bottom reference to x where x is a real number which is assigned the units of the display. This command will also affect the top reference.

YDIV (?) g {,x}

The YDIV command sets or queries the vertical scale for trace g. The YDIV g,x command sets the vertical scale to x/division where x is a real number which is assigned the units of the display. This command will also affect the top and bottom reference. The graph will be adjusted so that the marker Y position stays in the center of the graph.

To set the graph to specific range, use the YDIV command first to set the scale, then either TREF or BREF to set the location. This way, the final graph does not depend upon the marker location.

EXPD (?) g {,i}

The EXPD command sets or queries the X expansion for trace g. The parameter i selects no expansion (i=5), or 128 (i=4), 65 (i=3), 30(i=2), 15 (i=1) or 8 (i=0) bins across the graph.

ELFT (?) g {,i}

The ELFT command sets or queries the left most displayed bin when X scale expansion is on. The parameter $0 \leq i \leq 392$ is the bin number of the left most bin. The maximum value of i is determined by the expansion (number of bins across the graph) and the highest bin number (399). If a value of i is sent which is outside the allowed range, then the graph will either start at bin 0 or end at bin 399.

XAXS (?) g {,i}

The XAXS command sets or queries the X axis scaling type. The parameter i selects Linear (i=0) or Log (i=1).

INPUT COMMANDS

ISRC (?) {i} The ISRC command sets or queries the input configuration. The parameter i selects A (i=0) or A-B (i=1).

IGND (?) {i} The IGND command sets or queries the input grounding configuration. The parameter i selects Float (i=0) or Ground (i=1).

ICPL (?) {i} The ICPL command sets or queries the input coupling configuration. The parameter i selects AC (i=0) or DC (i=1).

IRNG (?) {i} The IRNG command sets or queries the input range. The parameter i selects the full scale input in dBV. The input range may be programmed in the range $-60 \le i \le 34$ where i is an even number. If auto ranging is on, the IRNG i command sets the ranging to manual and sets the input range to i.

ARNG (?) {i} The ARNG command sets or queries the ranging mode. The parameter i selects Manual (i=0) or Auto (i=1). If i=1 and autorange was already on, then a new autoranging is performed.

AOFM (?) {i} The AOFM command sets or queries the auto offset enable mode. The parameter i selects Off (no calibrations performed) (i=0) or On (calibrations automatically performed) (i=1). In many remote interfacing situations, it may desirable to turn the auto offset off since interface commands are held off while a calibration is taking place.

AOFF The AOFF command performs an offset calibration. This calibration takes about 10 seconds. During this time, no commands should be sent. The status bytes should be queried to determine when the command has finished execution.

TMOD (?) {i} The TMOD command sets or queries the triggering mode. The parameter i selects Continuous (i=0), Internal (i=1), External (i=2), or External TTL (i=3), or Source (i=4).

TRLV (?) {x} The TRLV command sets or queries the trigger threshold level. The TRLV x command sets the trigger level to x percent where $-100.0 \le x \le 99.22$. The resolution is 0.78%. The value of x will be rounded to the nearest allowed value.

TRSL (?) {i} The TRSL command sets or queries the trigger slope. The parameter i=0 selects positive or rising slope, while i=1 selects negative or falling slope.

TDLY (?) {i} The TDLY command sets or queries the trigger delay. The TDLY i command sets the trigger delay to i samples where $-13300 \le i \le 65000$. Negative values of i translate into a delay of i•3.9062 µs. Positive values translate into a delay of i•(1/512 of a time record).

ARMM (?) {i} The ARMM command sets or queries the trigger arming mode. The parameter i selects Auto Arming (i=0) or Manual Arming (i=1).

ARMS The ARMS manually arms the trigger when the arming mode is manual.

ANALYSIS COMMANDS

ANAM (?) g {,i}

The ANAM command sets or queries the real time analysis mode for trace g. The parameter i selects No Analysis (i=0), Harmonic Analysis (i=1), Sideband Analysis (i=2) or Band Analysis (i=3).

CALC? g,i

The CALC? command queries the result of the last real time calculation for trace g. The parameter i selects either the upper (i=0) or lower (i=1) result as displayed on the graph. For harmonic analysis, CALC?g,0 returns the harmonic level and CALC? g,1 returns the THD. When band analysis is on, i must be 0.

The values returned are exactly as displayed on the graph. If the calculation is UnderRange or OverRange, the value -1.23E-034 is returned.

The commands which duplicate the softkeys in the Harmonic, Sideband and Band analysis menus are available even if the analysis is not on. The analysis parameters may be programmed before analysis is turned on. This is not true for the Data and Limit table commands. Those commands have no effect if the appropriate table is not active.

FUND (?) g {,f}

The FUND command sets or queries the harmonic fundamental frequency for trace g. The parameter f is a real number of Hz. The value of f can be programmed with more resolution than the span linewidth.

NHRM (?) g {,i}

The NHRM command sets or queries the number of harmonics for trace g to i harmonics. The parameter i can range from 0 to 400.

NHLT

The NHLT command moves the marker to the next harmonic to the left of the current marker position if it is on the graph. If it is beyond the edge of the graph, the span center frequency is set to the frequency of the next harmonic (or as close as the frequency range allows).

NHRT

The NHRT command moves the marker to the next harmonic to the right of the current marker position if it is on the graph. If it is beyond the edge of the graph, the span center frequency is set to the frequency of the next harmonic (or as close as the frequency range allows).

SBCA (?) g {,f}

The SBCA command sets or queries the sideband carrier frequency for trace g. The parameter f is a real number of Hz. The value of f can be programmed with more resolution than the span linewidth.

SBSE (?) g {,f}

The SBSE command sets or queries the sideband separation frequency for trace g. The parameter f is a real number of Hz. The value of f can be programmed with more resolution than the span linewidth.

NSBS (?) g {,i}

The NSBS command sets or queries the number of sidebands for trace g to i sidebands. The parameter i can range from 0 to 200.

BSTR (?) g {,f}

The BSTR command sets or queries the band start frequency for trace g. The parameter f is a real number of Hz. The value of f can be programmed with more resolution than the span linewidth.

BCTR (?) g {,f}

The BCTR command sets or queries the band center frequency for trace g. The parameter f is a real number of Hz. The value of f can be programmed with more resolution than the span linewidth.

BWTH (?) g {,f} The BWTH command sets or queries the band width for trace g. The parameter f is a real number of Hz. The value of f can be programmed with more resolution than the span linewidth.

DATA TABLE COMMANDS

The Data Table commands listed below require that the data table display be active. The commands affect the displayed table and thus the active trace only.

TABL The TABL command activates the data table for the active trace. The screen display changes to the data table display. To turn off the data table, set the display back to single trace mode.

DTBL (?) {i} {,f} The DTBL command sets or queries the data table.

The DTBL? command queries the entire table. The data is returned in the form X1,Y1,X2,Y2,X3,Y3 [lf] where Xn,Yn are the table X and Y entries for line n. The Y values are taken from the latest trace. Any Y value which corresponds to and X value not within the span returns the value -1.23E-034.

The DTBL? i command queries the X and Y values for line i only. The data is returned in the from X,Y [lf].

The DTBL i,f command sets the X value of line i to f. Remember that the X values have no units. However, they are usually frequencies and as such, the parameter f is a real number of Hz. If i is greater than the last line number in the table, the new line is added to the end of the table.

DINX (?) {i} The DINX command sets or queries the table index. The parameter i ranges from 0 to 199. If i is greater than the last index in the table, then a new line is added to the end of the table.

DINS The DINS command inserts a new line before the table index (the highlighted line). The new line becomes highlighted.

DIDT The DIDT command deletes the table index (highlighted line).

DLTB The DLTB command deletes the entire table.

LIMIT TABLE COMMANDS

The Limit Table commands listed below require that the limit table display be active. The commands affect the displayed table and thus the active trace only.

LIMT

The LIMT command activates the limit table for the active trace. The screen display changes to the limit table display. To turn off the limit table, set the display back to single trace mode.

TSTS (?) {i}

The TSTS command sets or queries the limit testing on/off condition. The parameter i selects limit testing Off (i=0) or On (i=1). This allows the limit table to be displayed without testing taking place.

PASF?

The PASF? command queries the result of the latest limit test. If the test passed, 0 is returned. If the test failed, 1 is returned.

LTBL (?) {i} {,j,f1,f2,y1,y2}

The LTBL command sets or queries the limit table. The parameter j selects Upper (j=0) or Lower (j=1) limit. The parameters f1 and f2 are Xbegin and Xend. f1 and f2 are real numbers of Hz. The parameters y1 and y2 are Y1 and Y2 and real unitless numbers.

The LTBL? command queries the entire table. The data is returned in the form j,f1,f2,y1,y2,j,f1,f2,y1,y2,j,f1,f2,y1,y2 [lf] where j,f1,f2,y1,y2 are the entries in a single line. Line 0 is sent first.

The LTBL? i command queries the entries for line i only. The data is returned in the form j,f1,f2,Y1,Y2 [lf].

The LTBL i,j,f1,f2,y1,y2 command sets the entries of line i to j (0=upper, 1=lower), f1 (Xbegin), f2 (Xend), y1 (Y1) and y2 (Y2). If i is greater than the last line number in the table, the new line will be added to the end of the table.

LINX (?) {i}

The LINX command sets or queries the table index (highlighted line number). The parameter i ranges from 0 to 99. If i is greater than the last index in the table, then a new line is added to the end of the table.

LINS

The LINS command inserts a new line before the table index (highlighted line). The new line becomes highlighted.

LIDT

The LIDT command deletes the table index (highlighted line).

LLTB

The LLTB command deletes the entire table.

LARM (?) {i}

The LARM command sets or queries the audio limit fail alarm on/off condition. The parameter i selects alarm Off (i=0) or Enabled (i=1).

AVERAGING COMMANDS

AVGO (?) {i}

The AVGO command sets or queries the averaging on/off condition. The parameter i selects averaging Off (i=0) or On (i=1).

NAVG(?) {i}

The NAVG command sets or queries the number of averages. The parameter i ranges from 2 to 32767.

AVGT (?) {i}

The AVGT command sets or queries the average type. The parameter i selects RMS (i=0), Vector (i=1) or Peak Hold (i=2).

AVGM (?) {i}

The AVGM command sets or queries the averaging mode. The parameter i selects Linear (i=0) or Exponential (i=1).

OVLP (?) {x}

The OVLP command sets or queries the overlap percentage. The OVLP x command sets the overlap to x percent. The value of x ranges from 0 to 99.8. If the programmed value exceeds the maximum allowable overlap for the span, the overlap will be set to the maximum allowed.

SOURCE COMMANDS

STYP (?) {i}

The STYP command sets or queries the source type. The parameter i selects Off (i=0), Sine (i=1), 2-Tone (i=2), Noise (i=3) or Chirp (i=4). The configuration of each source may be set before the source is turned on.

SLVL (?) i {,x}

The SLVL command sets or queries the source level. The parameter i selects Sine (i=0), Tone 1 (i=1), Tone 2 (i=2), Noise (i=3) or Chirp (i=4). The parameter i is required. The SLVL i,x command sets source i level to x mV.

SFRQ (?) i, {,f}

The SFRQ command sets or queries the source frequency. The parameter i selects Sine (i=0), Tone 1 (i=1), Tone 2 (i=2). The parameter i is required. The SFRQ i,f command sets source i frequency to f Hz.

SCAL (?) {i}

The SCAL command sets or queries the Source Cal mode for noise and chirp sources. The parameter i selects Source Cal Off (i=0) or On (i=1). This command only has an effect when the source type is noise or chirp.

Source Cal has NO effect unless the source is Chirp or Noise.

Do not select Source Cal On and use an external signal source. The input calibrations are modified and will result in measurement errors unless the SR770 internal source is used as the test signal!

APHS

The APHS command performs the Auto Phase function. This command only has an effect when the noise source is chirp.

NTYP (?) {i}

The NTYP command sets or queries the noise type. The i selects white noise (i=0) or pink noise (i=1).

PRINT and PLOT COMMANDS

PLOT The PLOT command generates a plot of the entire screen. Each feature uses the pen assigned in the Setup Plotter menu. The marker is plotted only if the marker is on.

PTRC The PTRC command plots only the data trace(s).

PMRK The PMRK command plots only the marker(s) if they are on. The marker readout is plotted next to the marker.

PTTL (?) {s} The PTTL command sets or queries the plot title. The string s is the title.

PSTL (?) {s} The PSTL command sets or queries the plot subtitle. The string s is the subtitle.

PRSC The PRSC command will print the currently displayed screen to a printer attached to the rear panel parallel printer port. This function is the same as the [PRINT] key. The printer type needs to be configured before using the PRSC command.

PSET The PSET command will print the analyzer settings to a printer attached to the rear panel parallel printer port. The printer type needs to be configured before using the PSET command.

PLIM The PLIM command will print the limit table for the active trace to a printer attached to the rear panel parallel printer port. The printer type needs to be configured before using the PLIM command.

PDAT The PDAT command will print the data table for the active trace to a printer attached to the rear panel parallel printer port. The printer type needs to be configured before using the PDAT command.

SETUP COMMANDS

OUTP (?) {i} The OUTP command sets the output interface to RS232 (i=0) or GPIB (i=1). The OUTP i command should be sent before any query commands to direct the responses to the interface in use.

OVRM (?) {i} The OVRM command sets or queries the GPIB Overide Remote Yes/No condition. The parameter i selects No (i=0) or Yes (i=1).

KCLK (?) {i} The KCLK command sets or queries the key click On (i=1) or Off (i=0) state.

ALRM (?) {i} The ALRM command sets or queries the alarm On (i=1) or Off (i=0) state.

THRS (?) {i} The THRS command sets or queries the hours setting of the clock. The value of i is in the range $0 \leq i \leq 23$.

TMIN (?) {i} The TMIN command sets or queries the minutes setting of the clock. The value of i is in the range $0 \leq i \leq 59$.

TSEC (?) {i} The TSEC command sets or queries the seconds setting of the clock. The value of i is in the range $0 \leq i \leq 59$.

DMTH (?) {i} The DMTH command sets or queries the months setting of the calendar. The value of i is in the range $1 \leq i \leq 12$.

DDAY (?) {i} The DDAY command sets or queries the days setting of the calendar. The value of i is in the range $1 \leq i \leq 31$.

DYRS (?) {i} The DYRS command sets or queries the years setting of the calendar. The value of i is in the range $0 \leq i \leq 99$.

PLTM (?) {i} The PLTM command sets or queries the plotter mode. If i=0 plotting is directed to the RS232 interface, if i=1 plotting is to the GPIB interface.

PLTB (?) {i} The PLTB command sets or queries the RS232 plotter baud rate. The parameter i ranges from 0 to 4 and selects baud rates of 300 (0),1200 (1), 2400 (2), 4800 (3), and 9600 (4). This baud rate should match the baud rate of the plotter in use.

PLTA (?) {i} The PLTA command sets or queries the GPIB plotter address. The parameter i ranges from 0 to 30 and should agree with the address of the plotter in use.

PLTS (?) {i} The PLTS command sets or queries the plot speed. If i=0 fast plot speed is used, if i=1 slow plot speed is used.

PNTR (?) {i} The PNTR command sets or queries the trace pen number. The pen number is in the range of 1 to 6.

PNGD (?) {i} The PNGD command sets or queries the grid pen number. The pen number is in the range of 1 to 6.

PNAP (?) {i} The PNAP command sets or queries the alphanumeric pen number. The pen number is in the range of 1 to 6.

PNCR (?) {i} The PNCR command sets or queries the marker pen number. The pen number is in the range of 1 to 6.

PRNT (?) {i} The PRNT command sets or queries the printer type. The printer type may be EPSON (i=0) or HP (i=1).

STORE AND RECALL FILE COMMANDS

When using file commands, the status byte should be queried after the command is sent to check if the command generated an error. Common sources of errors are file not on disk, no space on disk, and no disk in drive. For example, the command line SVTR;ERRS? <lf> will save the data to disk and return the Error Status Byte when finished. The Disk Error bit may be checked to make sure that the Save Trace command terminated without error.

FNAM (?) {s}

The FNAM command sets or queries the active file name. All file operations use the name specified by the FNAM command. **Be sure to use the FNAM s command before any file operation commands**. For example, "FNAM MYDATA.DAT" will set the active file name to MYDATA.DAT. DOS file name conventions must be followed, i.e. file names are 8 characters or less with an optional extension of up to 3 characters. Subdirectories are not supported. All file access is to the root directory.

SVTR

The SVTR command saves the active trace data, display and measurement settings, and scaling parameters to the file specified by the FNAM command. The associated data and limit tables are also saved. The SVTR command saves the data in binary form so that it may be recalled to the display.

SVTA

The SVTA command saves the active trace data in ASCII form to the file specified by the FNAM command. See the Store and Recall menu secion for more details on ASCII files.

SVST

The SVST command saves the analyzer settings to the file specified by the FNAM command.

RCTR

The RCTR command recalls trace data, display and measurement settings, and scaling parameters from the file specified by the FNAM command to the active trace graph. Data and limit tables are also recalled.

RCST

The RCST command recalls the analyzer settings from the file specified by the FNAM command.

TRACE MATH COMMANDS

When using the math command COPR, the status bytes should be queried after the command is sent to check if the command generated an error. Common sources of errors are divide by zero, math overflow and underflow. For example, the command line COPR;*ESR? <lf> will perform an operation and return the Standard Event Status Byte when finished. The Execution Error bit may be checked to make sure that the FITS command terminated without error.

CSEL (?) {i}

The CSEL command sets or queries the type of math operation selected. The parameter i selects the operation.

i	operation
0	+
1	-
2	x
3	/
4	√
5	log (base 10)
6	phase unwrap
7	d/dx

COPR {i}

The COPR command starts the calculation selected by the CSEL command. This may take some time. Use status byte query to detect when the calculation is done. Make sure that CARG and CONS have been used to set the argument value before using the COPR command.

The parameter I selects the aperture for the d/dx operation and is required if the operation is d/dx. I may be omitted for all other operations. The aperture is 6.25% (I=0), 5.25% (I=1), 4.25% (I=2), 2.75% (I=1 or 1.25% (I=0).

CARG (?) {i}

The CARG command sets or queries the argument type. The parameter i selects Constant (i=0), Other Graph (i=1), or ω or $2\pi f$ (i=2).

CONS (?) {x}

The CONS command sets or queries the constant argument. The parameter x is a real number.

CMRK

The CMRK command sets constant argument to the Y value of the marker.

FRONT PANEL CONTROLS

STRT

The STRT command starts data acquisition. This function is the same as pressing the [START] key. If the analyzer is already in the run mode, then any average is reset.

STCO

The STCO command pauses or continues data acquisition. This function is the same as pressing the [PAUSE CONT] key. If the analyzer is running, then the STCO command pauses the analyzer. If the analyzer is paused, then STCO resumes data acquisition without resetting any average. If the analyzer is stopped after a completed linear average, the STCO will do nothing since there is nothing to resume.

PRSC

The PRSC command will print the currently displayed screen to a printer attached to the rear panel parallel printer port. This function is the same as the [PRINT] key. The printer type needs to be confugured before using the PRSC command.

ACTG (?) {i}

The ACTG command sets or queries the active trace number. The parameter i selects Trace0 (i=0) or Trace1 (i=1). This is similar to the [ACTIVE TRACE] key.

ARNG (?) {i}

The ARNG command sets or queries the ranging mode. The parameter i selects Manual (i=0) or Auto (i=1). This is similar to the [AUTO RANGE] key. If i=1 and autorange is already on, a new autorange is performed.

AUTS g

The AUTS command performs the Auto Scale function on trace g. This function is the same as pressing the [AUTO SCALE] key when trace g is active. The AUTS command affects the TREF, BREF and YDIV parameters below.

DATA TRANSFER COMMANDS

SPEC? g, {i}

The SPEC? command reads the trace data in ASCII format from trace g. If the parameter i is included, only the value of the data in bin i is returned. The first bin is i=0 and the last bin is i=399 ($0 \le i \le 14$ for 15 band octave analysis and $0 \le i \le 29$ for 30 band octave analysis). If the parameter i is omitted, then the entire trace is returned. In this case, data is sent continuously starting with bin 0 and ending with the bin 399 (bin 14 or bin 29 for 15 or 30 band octave analysis). Each data point is separated by a comma and the last data point is followed by a line-feed (GPIB) or carriage return (RS232). This format is convenient when using DMA driven host interfaces. The data points are real numbers.

If SPEC? is used to transfer the entire record over the RS232 interface, the host computer interface should be interrupt driven or have fast data communication routines since the data transmission is limited only by the baud rate.

If SPEC? is used to transfer the entire trace, the returned data will be from the latest trace.

BVAL? g, i

The BVAL g, i command queries the X value of bin i of trace g. The returned value is either a frequency (spectra), a time (time record) or a band center frequency (octave analysis). The first bin is i=0 and the last bin is i=399 (i=14 or i=29 for 15 or 30 band octave analysis).

SPEB? g

The SPEB? g command reads the Y values of the entire trace g data record in binary format over the GPIB interface. The SPEB? g command is not available over the RS232 interface.

SPEB? g returns the entire trace record, 2 bytes per bin starting with bin 0 and continuing to bin 399 (bin 14 or bin 29 for 15 or 30 band octave analysis). There is no separation between data points. No line-feed follows the last data point, instead, EOI is asserted with the last byte. Each data point is sent low byte first, then high byte. The 2 bytes represent the data point in 16 bit 2's complement format.

The returned values are interpreted as follows:

Linear data: Data = (Value/32,768) x full scale (Volts, 180 deg, or π radians)

Log data: Data = (3.0103 x Value)/512 - 114.3914 dB full scale

When using the SPEB? g command, the host interface must be capable of binary transfer, i.e. accepting line feeds and carriage returns as data rather than terminators. In addition, the host program must read exactly the correct number of bytes (800 bytes plus the last line feed).

While a binary dump is in progress, the analyzer will not respond to any other queries and the display will not update.

If the host program does not start reading the points within 1 second, or pauses for 1 second while reading, the binary dump will be aborted.

BDMP (?) g {,i}

The BDMP command sets or queries the auto binary dump mode for trace g. The parameter i selects binary dump off (i=0) or on (i=1).

When auto binary dump mode is on, whenever new data becomes available, the data will be dumped in binary format over the GPIB interface (in the same format as the response to the SPEB? command). Auto binary dump is not available over the RS232 interface.

While a binary dump is in progress, the analyzer will not respond to any other queries and the display will not update.

When using the BDMP g,1 command, the host interface must be capable of binary transfer, i.e. accepting line feeds and carriage returns as data rather than terminators. In addition, the host program must read exactly the correct number of bytes (800 bytes for normal spectra, 30 or 60 bytes for 15 or 30 band octave analysis).

If the host program does not start reading the points within 1 second of the data becoming available, or pauses for 1 second while reading, the binary dump will be aborted and the auto binary dump mode will be turned off.

INTERFACE COMMANDS

***RST**

The *RST command resets the SR770 to its default configurations. The communications setup is not changed. All other modes and settings are set to their default conditions and values. This command takes some time to complete.

***IDN?**

The *IDN? query returns the SR770's device identification string. This string is in the format "Stanford_Research_Systems,SR770,s/n00001,ver007". In this example, the serial number is 00001 and the firmware version is 007.

LOCL (?) {i}

The LOCL command sets the RS232 local/remote function. If i=0 the SR770 is LOCAL, if i=1 the SR770 will go REMOTE, and if i=2 the SR770 will go into LOCAL LOCKOUT state. The states duplicate the GPIB local/remote states. In the LOCAL state both command execution and keyboard input are allowed. In the REMOTE state command execution is allowed but the keyboard and knob are locked out except for the [HELP] key which returns the SR770 to the LOCAL state. In the LOCAL LOCKOUT state all front panel operation is locked out, including the [HELP] key.

OVRM (?) {i}

The OVRM command sets or queries the GPIB Overide Remote Yes/No condition. The parameter i selects No (i=0) or Yes (i=1). When Overide Remote is set to Yes, then the front panel is not locked out when the unit is in the REMOTE state.

STATUS REPORTING COMMANDS

The Status Byte definitions follow this section.

***CLS** The *CLS command clears all status registers.

***ESE (?) {i} {,j}** The *ESE i command sets the standard status byte enable register to the decimal value i (0-255). The *ESE i,j command sets bit i (0-7) to j (0 or 1). The *ESE? command queries the value (0-255) of the status byte enable register. The *ESE? i command queries the value (0 or 1) of bit i.

***ESR? {i}** The *ESR? command queries the value of the standard status byte. The value is returned as a decimal number from 0 to 255. The *ESR? i command queries the value (0 or 1) of bit i (0-7). Reading the entire byte will clear it while reading bit i will clear just bit i.

***SRE (?) {i} {,j}** The *SRE i command sets the serial poll enable register to the decimal value i (0-255). The *SRE i,j command sets bit i (0-7) to j (0 or 1).The *SRE? command queries the value (0-255) of the serial poll enable register. The *SRE? i command queries the value (0 or 1) of bit i.

***STB? {i}** The *STB? command queries the value of the serial poll byte. The value is returned as a decimal number from 0 to 255. The *STB? i command queries the value (0 or 1) of bit i (0-7). Reading this byte has no effect on its value.

***PSC (?) {i}** The *PSC command sets the value of the power-on status clear bit. If i=1 the power-on status clear bit is set and all status registers and enable registers are cleared on power up. If i=0 the bit is cleared and the status enable registers maintain their values at power down. This allows a service request to be generated at power up.

ERRE (?) {i} {,j} The ERRE i command sets the error status enable register to the decimal value i (0-255). The ERRE i,j command sets bit i (0-7) to j (0 or 1). The ERRE? command queries the value (0-255) of the error status enable register. The ERRE? i command queries the value (0 or 1) of bit i.

ERRS? {i} The ERRS? command queries the value of the error status byte. The value is returned as a decimal number from 0 to 255. The ERRS? i command queries the value (0 or 1) of bit i (0-7). Reading the entire byte will clear it while reading bit i will clear just bit i.

FFTE (?) {i} {,j} The FFTE command sets the analyzer (FFT) status enable register to the decimal value i (0-255). The FFTE i,j command sets bit i (0-7) to j (0 or 1).The FFTE? command queries the value of the FFT status enable register.The FFTE? i command queries the value (0 or 1) of bit i.

FFTS? {i} The FFTS? command queries the value of the analyzer (FFT) status byte. The value is returned as a decimal number from 0 to 255. The FFTS? i command queries the value (0 or 1) of bit i (0-7). Reading the entire byte will clear it while reading bit i will clear just bit i.

STATUS BYTE DEFINITIONS

The SR770 reports on its status by means of four status bytes: the serial poll status byte, the standard status byte, the FFT status byte, and the error status byte.

Upon power-on, the SR770 may either clear all of its status enable registers or maintain them in the state they were in on power-down. The *PSC command determines which action will be taken.

The status bits are set to 1 when the event or state described in the tables below has occurred or is present.

SERIAL POLL STATUS BYTE

bit	name	usage
0	SCN	No measurements in progress
1	IFC	No command execution in progress
2	ERR	An unmasked bit in the error status byte has been set
3	FFT	An unmasked bit in the FFT status byte has been set
4	MAV	The interface output buffer is non-empty
5	ESB	An unmasked bit in the standard status byte has been set
6	SRQ	SRQ (service request) has occurred
7	Unused	

The ERR, FFT, and ESB bits are set whenever any bit in both their respective status bytes AND enable registers is set. Use the ***SRE, ***ESE, ERRE and FFTE commands to set enable register bits. The ERR, FFT and ESB bits are not cleared until ALL enabled status bits in the Error, FFT and Standard Event status bytes are cleared (by reading the status bytes or using ***CLS).

Using *STB? to read the Serial Poll Status Byte

A bit in the Serial Poll status byte is **NOT** cleared by reading the status byte using ***STB?. The bit stays set as long as the status condition exists. This is true even for SRQ. SRQ will be set whenever the same bit in the serial poll status byte AND serial poll enable register is set. This is independent of whether a serial poll has occurred to clear the service request.

Using SERIAL POLL

Except for SRQ, a bit in the Serial Poll status byte is **NOT** cleared by polling the status byte. When reading the status byte using a serial poll, the SRQ bit signals that the SR770 is requesting service. The SRQ bit will be set (1) the first time the SR770 is polled following a service request. The serial poll automatically clears the service request. Subsequent serial polls will return SRQ cleared (0) until another service request occurs. Polling the status byte and reading it with ***STB? can return different values for SRQ. When polled, SRQ indicates a service request has occurred. When read with ***STB?, SRQ indicates that an enabled status bit is set.

SERVICE REQUESTS (SRQ)

A GPIB service request (SRQ) will be generated whenever a bit in both the Serial Poll Status byte AND Serial Poll Enable register is set. Use *SRE to set bits in the Serial Poll Enable register. A service request is only generated when an enabled Serial Poll Status bit becomes set (changes from 0 to 1). An enabled status bit which becomes set and remains set will generate a single SRQ. If another service request from the same status bit is desired, the requesting status bit must first be cleared. In the case of the ERR, FFT and ESB bits, this means clearing the enabled bits in the ERR, FFT and ESB status bytes (by reading them). Multiple enabled bits in these status bytes will generate a single SRQ. Another SRQ (from ERR, FFT or ESB) can only be generated after clearing the ERR, FFT or ESB bits in the Serial Poll status byte. To clear these bits, ALL enabled bits in the ERR, FFT or ESB status bytes must be cleared.

The controller should respond to the SRQ by performing a serial poll to read the Serial Poll status byte to determine the requesting status bit. Bit 6 (SRQ) will be reset by the serial poll.

For example, to generate a service request when a TRIGGER occurs, bit 0 in the FFT Status Enable register needs to be set (FFTE 1 command) and bit 3 in the Serial Poll Enable register must be set (*SRE 8 command). When a trigger occurs, bit 0 in the FFT Status byte is set. Since bit 0 in the FFT Status byte AND Enable register is set, this ALSO sets bit 3 (FFT) in the Serial Poll Status byte. Since bit 3 in the Serial Poll Status byte AND Enable register is set, an SRQ is generated. Bit 6 (SRQ) in the Serial Poll Status byte is set. Further triggering will not generate another SRQ until the TRIGGER status bit is cleared. The TRIGGER status bit is cleared by reading the FFT Status byte (with FFTS?). Presumably, the controller is alerted to the trigger via the SRQ, performs a serial poll to clear the SRQ, does something in response to the trigger (read data for example) and then clears the TRIGGER status bit by reading the FFT status register. A subsequent trigger will then generate another SRQ.

STANDARD EVENT STATUS BYTE

bit	name	usage
0	INP	Set on input queue overflow (too many commands received at once, queues cleared)
1	Limit Fail	Set when a limit test fails
2	QRY	Set on output queue overflow (too many responses waiting to be transmitted, queues cleared)
3	Unused	
4	EXE	Set when a command can not execute correctly or a parameter is out of range
5	CMD	Set when an illegal command is received
6	URQ	Set by any key press or knob rotation
7	PON	Set by power-on

The Standard Event status byte is defined by IEEE-488.2 (1987) and is used primarily to report errors in commands received over the communications interfaces. The bits in this register remain set until cleared by reading them or by the *CLS command.

FFT STATUS BYTE	bit	name	usage
	0	Triggered	Set when a time record is triggered
	1	Prn/Plt Complete	Set when a printout or plot is completed
	2	New Data 0	Set when new data is available for trace 0
	3	New Data 1	Set when new data is available for trace 1
	4	Avg Complete	Set when a linear average is completed
	5	AutoRng Change	Set when auto range changes the range
	6	High Voltage	Set when high voltage detected at input. Input range may have been switched to 34 dBV.
	7	Settle	Set when settling is complete

The MCS Status bits stay set until cleared by reading or by the *CLS command.

ERROR STATUS BYTE	bit	name	usage
	0	Prn/Plt Error	Set when an error occurs during printing or plotting
	1	Math Error	Set when an internal math error occurs
	2	RAM Error	Set when the RAM Memory test finds an error
	3	Disk Error	Set when an error occurs during a disk or file operation
	4	ROM Error	Set when the ROM Memory test finds an error
	5	A/D Error	Set when the A/D test finds an error
	6	DSP Error	Set when the DSP test finds an error
	7	Overload	Set when the signal input exceeds the input range

The Error Status bits stay set until cleared by reading or by the *CLS command.

EXAMPLE PROGRAM 1

Using Microsoft C with the National Instruments GPIB card on the IBM PC.

To successfully interface the SR770 to a PC via the GPIB interface, the instrument, interface card, and interface drivers must all be configured properly. To configure the SR770, the GPIB address must be set in the SETUP menu. The default GPIB address is 10; use this address unless a conflict occurs with other instruments in your system. The SR770 will be set to GPIB address 10 whenever a reset is performed (power on with the [<-] key down).

Make sure that you follow all the instructions for installing the GPIB card. The National Instruments card cannot be simply unpacked and put into your computer. To configure the card you must set jumpers and switches on the card to set the I/O address and interrupt levels. You must run the program "IBCONF" to configure the resident GPIB driver for you GPIB card. Please refer to the National Instruments manual for information. In this example, the following options must be set with IBCONF:

Device name:	fft770
Device address:	10
EOS character:	0AH (linefeed)
Terminate Read on EOS:	Yes

Once all the hardware and GPIB drivers are configured, use "IBIC". This terminal emulation program allows you to send commands to the SR770 directly from your computer's keyboard. If you cannot talk to the SR770 via "IBIC", then your programs will not run.

Use the simple commands provided by National Instruments. Use "IBWRT" and "IBRD" to write and read from the SR770. After you are familiar with these simple commands, you can explore more complex programming commands.

```
/*****************************************************************************************************/
/* Example program using Microsoft C V5.1 and the National Instruments GPIB card */
/* This program assumes that the SR770 is installed as device "fft770" using IBCONF */

#include <stdio.h>
#include <dos.h>
#include <conio.h>
#include <stdlib.h>
#include <string.h>

#include "decl.h"

/* function prototypes */

void main(void);
int  ibfind(char*);
void ibwrt(int,char *,int);
void ibrd(int,char *,int);
void ibrsp(int,char *);
void ibeos(int,int);


void txsr770(char *);

/* global variables */

int sr770;                          /* device identifier for the sr770 */
int rxBuff[400];                    /* buffer for binary data from sr770 */
```

```
double dbs[400];                    /* double array of dB data */

void main(void)
{
int i,eos;
char serPol;
char tstr[30];
double full_scale;

if ((sr770=ibfind("fft770"))<0) {
        printf("\nCannot Find FFFT Device\n\a");
        exit(1);
        }

txsr770("*RST");                    /* return sr770 to default state */
txsr770("STOP");                    /* stop data acquisition */

txsr770("NAVG1000");                /* set 1000 averages */
txsr770("AVGO1");                   /* turn averaging on */

txsr770("STRT");                    /* start the average */

do  {
        ibrsp(sr770,&serPol);       /* wait for the average to complete */
        }   while ((serPol&1)==0);  /* by polling for no scans in progress */

printf("\nScan Finished; Acquiring Spectrum\n");


/*  now we turn off the 'terminate read on eos' to enable us
to use ibrd with the binary dump command. Note also that
we cannot use txsr770 with the SPEB command because
IFC RDY will not be set until >after< the spectrum
has been read. */

ibeos(sr770,0|'\n');                /* turn off terminate on EOS since binary data will be coming back
                                       and a 10H may be one of the values */
ibwrt(sr770,"SPEB?0",6);            /* binary dump graph 0 */
ibrd(sr770,(char *)rxBuff,800);     /* read 800 bytes of spectrum*/
ibeos(sr770,REOS|'n');              /* restore terminate on EOS for future commands */

printf("\n%d Bytes Read; Calculating Y Values\n",ibcnt);
getch();                                /* wait for keypress */

/*
To calculate db values from the binay data we use the
following formula:
dbFullScale = -114.3914 + n*3.0103/152      */
for (i=0;i<400;i++)  dbs[i] = -114.3914 + 3.0103 * (double) rxBuff[i] / 512.0 ;

/*
To calculate absolute dBV from dB relative to full
scale, we need to query the full scale input range.
*/

txsr770("IRNG?");
ibrd(sr770,tstr,30);
sscanf(tstr,"%ld",&full_scale);     /* full_scale = input range in dBV */
```

```
for (i=0;i<400;i++)  {
          dbs[i] += full_scale;
           printf("%6d  %f\n",i,dbs[i]);
           }

getch();                                   /* wait for keypress */

/*
alternatively, we can read the spectrum point by
point using the ASCII SPEC?g,i command
*/

for (i=0;i<400;i++)  {
          sprintf(tstr,"SPEC?0,%d",i);  /* construct each query string */
          txsr770(tstr);
          ibrd(sr770,tstr,30);              /* read each point back in ASCII */
          sscanf(tstr,"%lf",&dbs[i]);       /* convert ASCII string to a value */
          printf("%6d  %f\n",i,dbs[i]);
          }
}                                  /* end of main program */

void txsr770(char *str)                    /* function to send a command to the sr770 */
{
char serPol;

ibwrt(sr770,str,strlen(str));
do {
          ibrsp(sr770,&serPol);             /* now poll for IFC RDY to ensure completion of the command */
          }   while ((serPol&2)==0);        /* before returning */
}
```

EXAMPLE PROGRAM 2

Using BASIC with the National Instruments GPIB card on the IBM PC.

To successfully interface the SR770 to a PC via the GPIB interface, the instrument, interface card, and interface drivers must all be configured properly. To configure the SR770, the GPIB address must be set in the SETUP menu. The default GPIB address is 10; use this address unless a conflict occurs with other instruments in your system. The SR770 will be set to GPIB address 10 whenever a reset is performed (power on with the [<-] key down).

Make sure that you follow all the instructions for installing the GPIB card. The National Instruments card cannot be simply unpacked and put into your computer. To configure the card you must set jumpers and switches on the card to set the I/O address and interrupt levels. You must run the program "IBCONF" to configure the resident GPIB driver for you GPIB card. Please refer to the National Instruments manual for information. In this example, the following options must be set with IBCONF:

Device name:	fft770
Device address:	10
EOS character:	0AH (linefeed)
Terminate Read on EOS:	Yes

Once all the hardware and GPIB drivers are configured, use "IBIC". This terminal emulation program allows you to send commands to the SR770 directly from your computer's keyboard. If you cannot talk to the SR770 via "IBIC", then your programs will not run.

Use the simple commands provided by National Instruments. Use "IBWRT" and "IBRD" to write and read from the SR770. After you are familiar with these simple commands, you can explore more complex programming commands.

```
10 '*************************************************************************************************************************
100 'Example program using Microsoft GW BASIC and the National
110 'Instruments GPIB card. Program is equivalent to the C
120 'Example program. See the comments in the C program.
130 '
140 ' Use the file DECL.BAS provided by National Instruments
150 '
160   CLEAR ,60000! : IBINIT1=60000! : IBINIT2=IBINIT1+3 : BLOAD "bib.m",IBINIT1
170   CALL IBINIT1
(IBFIND,IBTRG,IBCLR,IBPCT,IBSIC,IBLOC,IBPPC,IBBNA,IBONL,IBRSC,IBSRE,IBRSV,IBPAD,IBSAD,IBIS
T,IBDMA,IBEOS,IBTMO,IBEOT,IBRDF,IBWRTF,IBTRAP,IBDEV,IBLN)
180   CALL IBINIT2
(IBGTS,IBCAC,IBWAIT,IBPOKE,IBWRT,IBWRTA,IBCMD,IBCMDA,IBRD,IBRDA,IBSTOP,IBRPP,IBRSP,IBDI
AG,IBXTRC,IBRDI,IBWRTI,IBRDIA,IBWRTIA,IBSTA%,IBERR%,IBCNT%)
185 '
190 'Done with DECL.BAS, this is our program
200 '
210 BDNAME$="FFT770"
220 CALL IBFIND(BDNAME$,SR770%)          'find the sr770
230 IF SR770%<0 GOTO 770
240 '
250 WRT$="*rst"                          'reset the fft analyzer
260 GOSUB 780                            'this subroutine sends a command
270 WRT$="STOP"
280 GOSUB 780                            'stop data acquisition in the sr770
290 WRT$="navg1000;avgo1"                'turn on 1000 averages
300 GOSUB 780
310 WRT$="strt"                          'and start the average
```

```
320 GOSUB 780
330 '
340 CALL IBRSP(SR770%,SP%)                    'poll until no data acquisition in progress (average done)
350 IF SP% MOD 2 = 0 GOTO 340
360 PRINT "Finished Acquiring Spectrum"
370 '
380 DIM BINARY%(400)                          'dimension a 400 element integer array (800 bytes)
390 V% = &HA                                  'V% = 10H (linefeed)
400 CALL IBEOS(SR770%,V%)                     'turn off "terminate on EOS" function so that we can read
binary data
410 WRT$="speb?0"                             'send the binary read command
420 CNT%=800                                  'we want to read 800 bytes (400 points)
430 CALL IBWRT(SR770%,WRT$)
440 CALL IBRDI(SR770%,BINARY%(0),CNT%) 'ibrd automatically reads all 800 points for us
445 '
450 DIM DBS(400)                              'dimension an array to hold the db data
460 FOR I=0 TO 399 STEP 1
470 DBS(I) = -114.3914! + 3.0103!*BINARY%(I)/512!      'convert the binary data into db full scale
480 PRINT I,DBS(I)                            'and print it
490 NEXT I
500 '
510 INPUT I     'wait for keypress
520 '
530 ' now we query the input range to get absoulte dBVs
540 '
550 WRT$="IRNG?"                              'query the input range
560 GOSUB 780
570 S$=SPACE$(20)
580 CALL IBRD(SR770%,S$)                      'get the answer
590 IRNG=VAL(S$)
600 FOR I=0 TO 399 STEP 1
610 DBS(I) = DBS(I) + IRNG                    'add the range to the dbfull scale values to get dBV
620 PRINT I,DBS(I)
630 NEXT I
640 INPUT I     ' wait for keypress
650 '
660 ' alternatively, we can use the spec? command to obtain the spectrum in ascii form, 1 point at a time
670 '
680 FOR I = 0 TO 399 STEP 1
690 WRT$ = "spec?0,"+STR$(I)                  'construct the command for each point
700 GOSUB 780
710 S$=SPACE$(20)
720 CALL IBRD(SR770%,S$)                      'read the point
730 PRINT I,S$
740 NEXT I
750 STOP
770 PRINT "Cannot find the SR770!"            'gpib error
770 STOP
780 CALL IBWRT(SR770%,WRT$)                   'send a command to the sr770
790 CALL IBRSP(SR770%,SP%)                    'serial poll
800 IF (SP% AND 2) <> 2 GOTO 790              'until interface is ready again (command finished)
810 RETURN
```

Introduction

The performance tests described in this section are designed to verify with a high degree of confidence that the unit is performing within the specifications.

The results of each test may be recorded on the test sheet at the end of this section.

[HARDKEYS]

The keypad consists of five groups of hardkeys. The ENTRY keys are used to enter numeric parameters which have been highlighted by a softkey. The MENU keys select a menu of softkeys. Pressing a menu key will change the menu boxes which are displayed next to the softkeys. Each menu groups together similar parameters and functions. The CONTROL keys start and stop actual data acquisition, select the marker and toggle the active trace the display. These keys are not in a menu since they are used frequently and while displaying any menu. The SYSTEM keys print the screen to a printer and display help messages. Once again, these keys can be accessed from any menu. The MARKER keys determine the marker mode and perform various marker functions. The marker functions can be accessed from any menu.

Hardkeys are referenced in braces like [MARKER].

<Softkeys>

The SR770 has a menu driven user interface. The 6 softkeys to the right of the video display have different functions depending upon the information displayed in the menu boxes along the right edge of the screen. In general, the softkeys have two uses. The first is to toggle a feature on and off or to choose between settings. The second is to highlight a parameter which is then changed using the knob or numeric keypad. In both cases, the softkeys affect the parameters which are displayed adjacent to them.

Softkeys are referenced in brackets like <Span>.

Knob

The knob is used to adjust parameters which have been highlighted using the softkeys. Most numeric entry fields may be adjusted using the knob. In addition, functions such as display zooming and scrolling use the knob as well. In these cases, the knob function is selected by the softkeys. The [MARKER] key, which can be pressed at any time, will set the knob function to scrolling the marker.

Preset

Throughout this section, it will be necessary to preset the analyzer into a known default state. To do this, turn the power off. Turn the power back on while holding down the [<-] (backspace) key. The unit will perform power up tests and then assume the default settings. Each test generally starts with a preset. This procedure will be referred to as {PRESET}.

Serial Number

If you need to contact Stanford Research Systems, please have the serial number of your unit available. The serial number is printed on a label affixed to the rear panel. The serial number is also displayed on the screen when the unit is powered on.

The serial number can also be displayed by pressing

[SYSTEM SETUP]
<More>
<Test Hardware>
<More>
<Screen Test>

Firmware Revision

The firmware revision code is displayed on the screen when the unit is powered on. The revision code is displayed along with the serial number in the System Setup menu as described above.

General Installation

POWER

Make sure that the power entry module on the rear panel is set for the AC line voltage in your area and that the correct fuse is installed. The selected AC voltage may be seen through the window on the power entry module. Verify that the line cord is plugged all the way into the power entry module and that the power button on the front panel is pressed in.

PERFORMANCE TESTS

SCREEN BRIGHTNESS

If the screen is too dark or too bright, adjust the brightness using the knob at the upper left of the screen. Do not set the brightness higher than necessary.

DISPLAY POSITION

Use the Setup Screen function in the SYSTEM SETUP menu to position the display in the center of the screen.

FAN

The fan in the SR770 is temperature controlled. When the unit is cold, the fan is at half speed. When the internal temperature reaches about 30° C, the fan speed increases. Do not block the vents in the chassis or the unit may not operate properly.

Necessary Equipment

The following equipment is necessary to complete the performance tests. The suggested equipment or its equivalent should be used.

1. **Frequency Synthesizer**

Freq Range	1 Hz to 1 MHz
Freq Accuracy	better than 5 ppm
Amplitude Accuracy	0.2 dB from 1 Hz to 100 kHz
Harmonic Distortion	≤ -65 dBc
Spurious	≤ -55 dBc
Recommended	SRS DS345

2. **AC Calibrator**

Freq Range	10 Hz to 100 kHz
Amplitude	1 mV to 10 V
Accuracy	0.1%

External phase locking capability

Recommended	Fluke 5200A

3. **Low Distortion Sine Oscillator**

Freq Range	1 Hz to 100 kHz
Harmonic Distortion	≤ -90 dBc (< 20 kHz)
	≤ -80 dBc (< 100 kHz)
Recommended	Krohn-Hite 4400A

4. **Feedthrough Terminations**

Impedance	50 Ω

Warm Up

The analyzer should be turned on and allowed to warm up for at least an hour before any tests are performed. The self test does not require any warm up period.

It is necessary to turn the unit off and on to preset it. As long as the unit is powered on immediately, this will not affect the test results.

The Auto Offset feature must be left enabled (On). Disabling the Auto Offset may invalidate the results of some tests.

The Test Record

Make a copy of the SR770 Performance Test Record at the end of this section. Fill in the results of the tests on this record. This record will allow you to determine whether the tests pass or fail and also preserve a record of the tests.

If A Test Fails

If a test fails, you should check the settings and connections of any external equipment and, if possible, verify its operation using a DVM, scope or some other piece of test equipment.

After checking the setup, repeat the test from the beginning to make sure that the test was performed correctly.

If the test continues to fail, contact Stanford Research Systems for further instructions. Make sure that you have the unit's serial number and firmware revision code handy. Have the test record on hand as well.

1. Self Tests

The self tests check the analyzer hardware. These are functional tests and do not relate to the specifications. These tests should be run before any of the performance tests.

Note that the Test menu offers more tests than are required here. Only those tests which require no additional equipment are discussed in this section. The computer interface and disk drive tests are not required but should be periodically checked. See the System Setup menu for more information about those tests.

Setup

No external setup is required for this test.

Procedure

1) {PRESET} (Turn on the analyzer with the [<-] key pressed)
At power up, the RAM, ROM, DSP and A/D tests should all be OK.

2) Press the keys in the following sequence:

[SYSTEM SETUP]
<More>
<Test Hardware>
<Keypad Test>
Press all of the front panel keys until all of the boxes on the screen are filled in.
Rotate knob to exit this screen.
<Knob Test>
<Speed 2>
Rotate the knob to verify rotation and direction.
<Return>
<More>
<Memory Test>
<Main Mem>
<Begin Test>
All of the main memory chips should Pass.
<Return>
<Video Mem>
<Begin Test>
All of the video memory chips should Pass.
<Return>
<Return>
<DSP Test>
Both DSP chips should report 0 errors.
Press any key to exit this test.

3) This completes the functional hardware tests. Enter the results of this test in the test record at the end of this section.

2. DC Offset

This test measures the DC offset of the input.

Setup

Connect a 50Ω feedthrough termination to the A input. This shorts the input so the analyzer's own DC offset will be measured.

Procedure

1) {PRESET} (Turn the analyzer off, wait a few seconds, then back on with the [<-] key pressed)

2) Press the keys in the following sequence:

    [FREQ]
    <Span>
    [1] [.] [5] <kHz>

    [DISPLAY]
    <Marker Width>
    Select Spot Marker

    [MARKER]
    Rotate the knob so that the marker is at DC. The marker readout above the graph should read 0.0 kHz.

    [AVERAGE]
    <Number of Averages>
    [2] [0] <Enter>
    <Averaging>
    Select On

    [INPUT]
    <Coupling>
    Select DC

3) a) Press
    <Input Range>
    [-] [3] [0] <dBV>

    [START]

    [AUTO SCALE]

    b) Record the marker Y reading for the -30 dB range.

    c) Press
    <Input Range>
    [-] [6] [0] <dBV>

    [START]

    [AUTO SCALE]

    d) Record the marker Y reading for the -60 dB range.

4) This completes the DC measurement test. Enter the results of this test in the test record at the end of this section.

3. Common Mode Rejection

This test measures the common mode rejection of the analyzer.

Setup

We will use the frequency synthesizer to provide the signal.

Connect the output of the frequency synthesizer to both the A and B inputs of the analyzer. Use equal length cables from A and B to a BNC TEE. Connect the cable from the synthesizer output to the TEE using the appropriate feedthrough termination.

Procedure

1) {PRESET} (Turn the analyzer off, wait a few seconds, then back on with the [<-] key pressed)

2) Set the frequency synthesizer to a frequency of 1 kHz and an amplitude of 446 mVrms.

3) Press the keys in the following sequence:

```
[FREQ]
    <Span>
        [1] [.] [5] <kHz>
    <Center Freq.>
        [1] <kHz>

[INPUT]
    <Input Range>
        [-] [2] <dBV>

[AUTO SCALE]

[MARKER MAX/MIN]

[AVERAGE]
    <Number of Averages>
        [2] [0] <Enter>
    <Averaging>
        Select On

[MARKER REF]

[INPUT]
    <Input Source>
        Select A-B

[START]
```

4) Record the marker Y reading. This is the CMRR (in dB) at 1 kHz.

5) This completes the CMRR measurement test. Enter the results of this test in the test record at the end of this section.

4. Amplitude Accuracy and Flatness

This test measures the amplitude accuracy and frequency response.

Setup

We will use the frequency synthesizer to provide an accurate frequency and the AC calibrator to provide a sine wave with an exact amplitude.

Connect the output of the frequency synthesizer to the phase lock input of the calibrator. Connect the output of the AC calibrator to the A input of the analyzer. Be sure to use the appropriate terminations where required.

Set the Synthesizer to:		Set the AC Calibrator to:	
Function	Sine	Frequency	1 kHz
Frequency	1 kHz	Amplitude	0.707 mVrms
Amplitude	0.5 Vrms	Voltage	Off
Offset	off or 0V	Phase Lock	On
Sweep	off	Sense	Internal
Modulation	none		

Procedure

1) {PRESET} (Turn the analyzer off and on with the [<-] key pressed)

2) Press the keys in the following sequence:

[MEAS]
<Window>
<Flattop>
[FREQ]
<Span>
[1] [.] [5] <kHz>
<Center Freq.>
[1] <kHz>

[AVERAGE]
<Number of Averages>
[2] [0] <Enter>
<Averaging>
Select On

3) Amplitude accuracy is verified at 1 kHz and various input ranges. For each range setting in the table below, perform steps 3a through 3d.

Input Range (pk)	AC Calibrator Amplitude
-46 dBV	2.509 mVrms
-38 dBV	6.302 mVrms
-30 dBV	15.830 mVrms
-14 dBV	99.881 mVrms
4 dBV	0.7934 Vrms
10 dBV	1.5830 Vrms

a) Set the AC calibrator to the amplitude shown in the table.

b) Press
[Input]
<Input Range>
Enter the range from the table.

c) Press
[START]

[AUTO SCALE]

[MARKER MAX/MIN]

d) Record the marker Y reading for each range.

Frequency response is checked at frequencies above 1 kHz. The test frequencies are listed below. The measurements are performed for two different input ranges.

Test Frequencies
24 kHz
48 kHz
76 kHz
99 kHz

a) Set the AC calibrator to 1 kHz and an amplitude of 99.881 mVrms.

b) Set the frequency synthesizer to 1 kHz.

c) Press
[FREQ]
<Center Freq.>
[1] <kHz>

[INPUT]
<Input Range>
[-] [1] [4] <dBV>

[START]

[AUTO SCALE]

[MARKER MAX/MIN]
The Y value of the marker should now read –17.0 dB (±0.30 dB)

d) Set the AC calibrator and frequency synthesizer to the frequency in the table.

e) Press
[FREQ]
<Center Freq.>
Enter the signal frequency.

[START]

[MARKER MAX/MIN]

f) Record the marker Y reading. Repeat steps 4d and 4e for all of the frequencies listed.

4) Now repeat the frequency response measurements at a different input range.

a) Set the AC calibrator to 1 kHz and an amplitude of 6.3021 Vrms.

b) Set the frequency synthesizer to 1 kHz.

c) Press

[FREQ]
<Center Freq.>
[1] <kHz>

[INPUT]
<Input Range>
[2] [2] <dBV>

[START]

[AUTO SCALE]

[MARKER MAX/MIN]

[MARKER REF]
The Y value of the marker should now read +19.0 dB (±0.30 dB)

d) Repeat steps 4d through 4f above.

5) This completes the amplitude accuracy and frequency response test. Enter the results of this test in the test record at the end of this section.

5. Amplitude Linearity

This test measures the amplitude linearity. This tests how accurately the analyzer measures a signal smaller than full scale.

Setup

We will use the frequency synthesizer to provide an accurate frequency and the AC calibrator to provide a sine wave with an exact amplitude.

Connect the output of the frequency synthesizer to the phase lock input of the calibrator. Connect the output of the AC calibrator to the A input of the analyzer. Be sure to use the appropriate terminations where required.

Set the Synthesizer to:

Function	Sine
Frequency	1 kHz
Amplitude	0.5 Vrms
Offset	off or 0V
Sweep	off
Modulation	none

Set the AC Calibrator to:

Frequency	1 kHz
Amplitude	1.1207 Vrms
Voltage	Off
Phase Lock	On
Sense	Internal

Procedure

1) {PRESET} (Turn the analyzer off, wait a few seconds, then back on with the [<-] key pressed)

2) Press the keys in the following sequence:

[MEAS]
<Window>
<Flattop>

[FREQ]
<Span>
[1] [.] [5] <kHz>
<Center Freq.>
[1] <kHz>

[AVERAGE]
<Number of Averages>
[2] [0] <Enter>
<Averaging>
Select On

[INPUT]
<Input Range>
[2] [2] <dBV>

[START]

[AUTO SCALE]

[MARKER MAX/MIN]

3) For each of the amplitudes listed below, perform steps 3a through 3c.

AC Calibrator Amplitudes

1.1207 Vrms
141.09 mVrms
22.361 mVrms
3.544 mVrms
0.707 mVrms

a) Set the AC calibrator to the amplitude in the table.

b) Press [START]

c) Record the marker Y reading.

4) This completes the amplitude accuracy and frequency response test. Enter the results of this test in the test record at the end of this section.

6. Anti-alias Filter Attenuation

This test measures the attenuation of the anti-alias filter. This tests how well the analyzer rejects frequencies outside the 100 kHz frequency range.

Setup

We will use the frequency synthesizer to provide the signal.

Connect the output of the frequency synthesizer to the A input of the analyzer. Be sure to use the appropriate terminations where required.

Procedure

1) {PRESET} (Turn the analyzer off, wait a few seconds, then back on with the [<-] key pressed)

2) Set the frequency synthesizer to a frequency of 99 kHz and an amplitude of 446 mVrms.

3) Press the keys in the following sequence:

    [FREQ]
    <Span>
    [1] [.] [5] <kHz>
    <Center Freq.>
    [9] [9] <kHz>

    [INPUT]
    <Input Range>
    [-] [2] <dBV>

    [AUTO SCALE]

    [MARKER MAX/MIN]

4) Adjust the synthesizer amplitude so that the marker Y value reads -4.0 dB ± 0.2 dB.

5) Press
    [AVERAGE]
    <Number of Averages>
    [2] [0] <Enter>
    <Averaging>
    Select On

    [MARKER REF]

6) Set the synthesizer frequency to 157 kHz.

7) Press
    [START]

8) Record the marker Y reading.

9) This completes the anti-alias filter attenuation test. Enter the results of this test in the test record at the end of this section.

7. Frequency Accuracy

This test measures the frequency accuracy of the analyzer. This tests the accuracy of the fundamental crystal timebase inside the unit.

Setup

We will use the frequency synthesizer to provide the signal.

Connect the output of the frequency synthesizer to the A input of the analyzer. Be sure to use the appropriate terminations where required.

Procedure

1) {PRESET} (Turn the analyzer off and on with the [<-] key pressed)

2) Set the frequency synthesizer to a frequency of 10 kHz and an amplitude of 400 mVrms.

3) Press the keys in the following sequence:

    [FREQ]
        <Span>
            [1] [2] <Hz>
        <Center Freq.>
            [1] [0] <kHz>

    [INPUT]
        <Input Range>
            [-] [2] <dBV>

    [AUTO SCALE]

    [MARKER MAX/MIN]

4) Wait for the spectrum to settle, then record the marker frequency reading.

3) This completes the frequency accuracy test. Enter the results of this test in the test record at the end of this section.

8. Phase Accuracy

This test measures the phase accuracy of the analyzer. This test measures the phase of a signal relative to the trigger.

Setup

We will use the frequency synthesizer to provide the signal.

Connect the output of the frequency synthesizer to the A input of the analyzer. Be sure to use the appropriate terminations where required.

Procedure

1) {PRESET} (Turn the analyzer off, wait a few seconds, then back on with the [<-] key pressed)

2) Set the frequency synthesizer to a frequency of 10 kHz and an amplitude of 400 mVrms.

3) Press the keys in the following sequence:

```
[INPUT]
    <Input Range>
        [-] [2] <dBV>
    <Trigger Menu>
        <Trigger>
            Select Internal Trigger

[AUTO SCALE]

[DISPLAY]
    <Format>
        Select Up/Dn
    <Marker Width>
        Select Spot

[MARKER MAX/MIN]

[ACTIVE TRACE]

[DISPLAY]
    <Marker Width>
        Select Spot

[MEAS]
    <Display Menu>
        <Phase>

[ACTIVE TRACE]

[MARKER MODE]
    <Linked Markers>
        Select On

[AVERAGE]
    <Number of Averages>
        [2] [0] <Enter>
```

<Average Type>
Select Vector
<Averaging>
Select On

4) Record the marker Y reading for Trace1 (lower trace Y reading in degrees).

5) Press
[INPUT]
<Trigger Menu>
<Trigger Slope>
Select Falling Edge

[START]

6) Record the marker Y reading for Trace1 (in degrees)

7) This completes the phase accuracy test. Enter the results of this test in the test record at the end of this section.

9. Harmonic Distortion

This test measures the harmonic distortion of the analyzer.

Setup

We will use the low distortion oscillator to provide the signal.

Connect the output of the low distortion oscillator to the A input of the analyzer. Be sure to use the appropriate termination.

Procedure

1) {PRESET} (Turn the analyzer off, wait a few seconds, then back on with the [<-] key pressed)

2) Set the low distortion oscillator to a frequency of 24 kHz and an amplitude of 70 mVrms.

3) Press the keys in the following sequence:

    [INPUT]
        <Input Range>
            [-] [1] [6] <dBV>

    [AUTO SCALE]

    [MARKER MAX/MIN]

4) Adjust the oscillator frequency to 24.0 kHz.
   Adjust the oscillator amplitude until the marker Y reading is -20.0 dBV ± 0.2 dBV.

5) Press
    [AVERAGE]
        <Number of Averages>
            [2] [0] <Enter>
        <Averaging>
            Select On

    [MARKER REF]

    [ANALYZE]
        <Harmonic>

6) Repeat steps 6a through 6 three times to measure the harmonics in the table below.

Fundamental	Harmonic #	Harmonic Frequency
24.0 kHz	2	48 kHz
	3	72 kHz
	4	96 kHz

   a) Press <# Harmonics>
        [2] <Enter>

   b) Press <Next Harmonic ->> to move the marker to the next harmonic to the right.

   c) Record the marker Y reading.

7) Press
   [MARKER]

8) Use the knob to move the marker to a region between the 2nd and 3rd harmonics. Make sure that the marker is reading a point representative of the noise floor.

   Note the marker Y value. If the noise floor is above -93 dB, then the harmonic distortion measurements are invalid. A generator with a lower noise floor is required.

9) This completes the harmonic distortion test. Enter the results of this test in the test record at the end of this section.

10. Noise and Spurious Signals

This test measures the analyzer noise floor and checks for spurious signals.

Setup

Connect a 50Ω feedthrough termination to the A input. This grounds the input so the analyzer's own noise is measured.

Procedure

1) {PRESET} (Turn the analyzer off, wait a few seconds, then back on with the [<-] key pressed)

2) Press the keys in the following sequence:

```
[FREQ]
    <Span>
        [5] [0] <kHz>
    <Start Freq.>
        [1] <kHz>

[INPUT]
    <Input Range>
        [-] [5] [0] <dBV>

[MEAS]
    <Measure Menu>
        <PSD>
        <Return>
    <Units Menu>
        <dBVrms>

[SCALE]
    <Top Ref.>
        [-] [4] [0] <dBV/√Hz>

[AVERAGE]
    <Number of Averages>
        [2] [0] <Enter>
    <Averaging>
        Select On

[MARKER MAX/MIN]
```

3) Record the marker Y reading.

4) Press

```
[FREQ]
    <Start Freq.>
        [5] [0] <kHz>

[START]

[MARKER MAX/MIN]
```

5) Record the marker Y reading.

6) Press
[MEAS]
<Measure Menu>
<Spectrum>
<Return>
<Units Menu>
<dBV>

7) For each of the spans listed below, perform steps 7a and 7b.

Center Frequency	Span
200 Hz	390 Hz
500 Hz	390 Hz
1 kHz	1.56 kHz
5 kHz	1.56 kHz
10 kHz	1.56 kHz
25 kHz	1.56 kHz
50 kHz	1.56 kHz
75 kHz	1.56 kHz
99 kHz	1.56 kHz

a) Press
[FREQ]
<Span>
Enter the span from the table
<Center Freq.>
Enter the center frequency from the table

Wait for the "Settling" message at the bottom left corner of the screen to go out after changing the center frequency, then press

[START]

[AUTO SCALE]

[MARKER MAX/MIN]

b) Record the marker Y reading for each center frequency.

8) This completes the noise and spurious signal test. Enter the results of this test in the test record at the end of this section.

11. Sine Source

This test measures the source sine output.

Setup

Connect the Source output to the A input.

Procedure

1) {PRESET} (Turn the analyzer off, wait a few seconds, then back on with the [<-] key pressed)

2) Press the keys in the following sequence:

    [SOURCE]
    <Sine>

    [AUTO RANGE]

    [MARKER MAX/MIN]

3) Record the marker Y reading.

4) Press
    [SOURCE]
    <Configure Source>
    <Level>
    [-] [2] [0] <dBV>

5) Record the marker Y reading.

6) Press
    [0] <dBV>

7) For each of the frequencies below, perform steps 7a and 7b.

    Frequency
    10 kHz
    20 kHz
    40 kHz
    60 kHz
    80 kHz
    99 kHz

    a) Press
    <Frequency>
    Enter the frequency from the table.

    [MARKER MAX/MIN]

    b) Record the marker Y reading.

8) This completes the source sine test. Enter the results of this test in the test record.

SR770 Performance Test Record

Serial Number_____ Tested By_____
Firmware Revision_____ Date_____

Equipment Used_____
_____

1. Self Tests

Test	Pass	Fail
Power On Test	____	____
Keypad	____	____
Knob	____	____
Main Memory	____	____
Video Memory	____	____
DSP Test	____	____

2. DC Offset

Input Range	Reading	Upper Limit
-30 dBV	_____	< -85 dBV
-60 dBV	_____	< -85 dBV

3. Common Mode Rejection

Input Range	Frequency	Reading	Upper Limit
-2 dBV	1.0 kHz	_____	< -80 dB

4. Amplitude Accuracy and Flatness

Input Range	Calibrator Ampl.	Lower Limit	Reading	Upper Limit
-46 dBV	2.509 mVrms	-49.20 dBV	_____	-48.80 dBV
-38 dBV	6.302 mVrms	-41.20 dBV	_____	-40.80 dBV
-30 dBV	15.830 mVrms	-33.20 dBV	_____	-32.80 dBV
-14 dBV	99.881 mVrms	-17.20 dBV	_____	-16.80 dBV
4 dBV	0.7934 Vrms	0.80 dBV	_____	1.20 dBV
10 dBV	1.5830 Vrms	6.80 dBV	_____	7.20 dBV

Flatness relative to 1 kHz

Input Range	Frequency	Lower Limit	Reading	Upper Limit
-14 dBV	24 kHz	-17.30 dBV	_____	-16.70 dBV
-14 dBV	48 kHz	-17.30 dBV	_____	-16.70 dBV
-14 dBV	76 kHz	-17.30 dBV	_____	-16.70 dBV
-14 dBV	99 kHz	-17.30 dBV	_____	-16.70 dBV

SR770 Performance Test Record

4. Amplitude Accuracy and Flatness Continued

Flatness relative to 1 kHz

Input Range	Frequency	Lower Limit	Reading	Upper Limit
22 dBV	24 kHz	-0.3 dBV	_____	+0.3 dBV
22 dBV	48 kHz	-0.3 dBV	_____	+0.3 dBV
22 dBV	76 kHz	-0.3 dBV	_____	+0.3 dBV
22 dBV	99 kHz	-0.3 dBV	_____	+0.3 dBV

5. Amplitude Linearity

Input Range	Calibrator Ampl.	Lower Limit	Reading	Upper Limit
22 dBV	1.1207 Vrms	3.80 dBV	_____	4.20 dBV
	141.09 mVrms	-14.21 dBV	_____	-13.80 dBV
	22.361 mVrms	-30.82 dBV	_____	-29.25 dBV
	3.544 mVrms	-52.26 dBV	_____	-42.40 dBV
	0.707 mVrms	-70 dBV	_____	50 dBV

6. Anti-Alias Filter Attenuation

Input Frequency	Reading	Upper Limit
157 kHz	_____	< -95 dB

7. Frequency Accuracy

Input Frequency	Lower Limit	Reading	Upper Limit
10 kHz	9.9998 kHz	_____	10.0003 kHz

8. Phase Accuracy

Frequency	Trigger Slope	Lower Limit	Reading	Upper Limit
10 kHz	Rising	-3.0 deg	_____	+3.0 deg
	Falling	+177.0 deg	_____	-177.0 deg

9. Harmonic Distortion

Fundamental	Harmonic Frequency	Reading	Upper Limit
24 kHz	48 kHz	_____	< -80 dB
	72 kHz	_____	< -80 dB
	96 kHz	_____	< -80 dB

SR770 Performance Test Record

10. Noise and Spurious Signals

Noise floor

Start Frequency	Span	Reading	Upper Limit
500 Hz	50 kHz	_____	-160 dBVrms/√Hz
50 kHz	50 kHz	_____	-160 dBVrms/√Hz

***** CRT retrace frequency (at approximately 15.6 kHz) and retrace frequency harmonics are excepted from these limits.

Spurious signals

Center Frequency	Span	Reading	Upper Limit
200 Hz	390 Hz	_____	-135 dBV
500 Hz	390 Hz	_____	-140 dBV
1 kHz	1.56 kHz	_____	-140 dBV
5 kHz	1.56 kHz	_____	-140 dBV
10 kHz	1.56 kHz	_____	-140 dBV
25 kHz	1.56 kHz	_____	-140 dBV
50 kHz	1.56 kHz	_____	-140 dBV
75 kHz	1.56 kHz	_____	-140 dBV
99 kHz	1.56 kHz	_____	-140 dBV

11. Sine Source

Amplitude

Frequency	Level	Lower Limit	Reading	Upper Limit
1 kHz	0 dBV	-0.3 dBV	_____	0.3 dBV
1 kHz	-20 dBV	-20.3 dBV	_____	-19.7 dBV

Amplitude Flatness

Frequency	Level	Lower Limit	Reading	Upper Limit
10 kHz	0 dBV	-0.3 dBV	_____	0.3 dBV
20 kHz	0 dBV	-0.3 dBV	_____	0.3 dBV
40 kHz	0 dBV	-0.3 dBV	_____	0.3 dBV
60 kHz	0 dBV	-0.3 dBV	_____	0.3 dBV
80 kHz	0 dBV	-0.3 dBV	_____	0.3 dBV
99 kHz	0 dBV	-0.3 dBV	_____	0.3 dBV

CIRCUIT DESCRIPTION

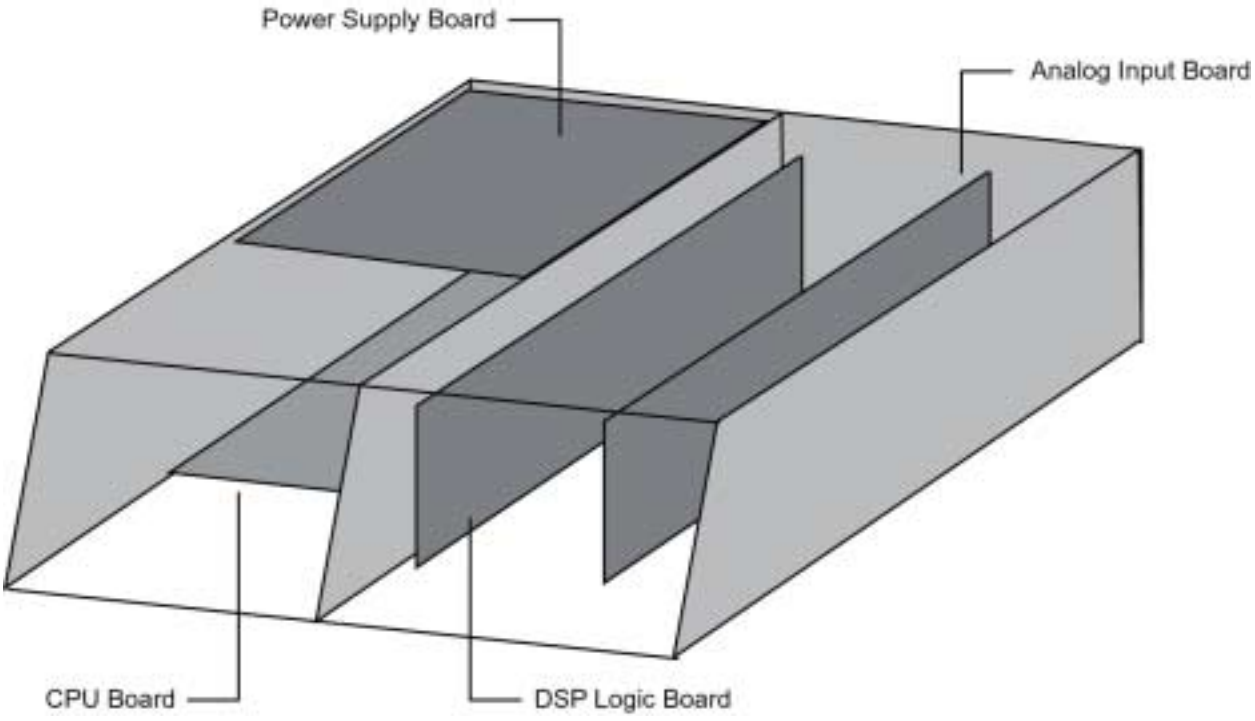

CAUTION

Always disconnect the power cord and wait at least one minute before opening the unit. Dangerous power supply voltages may be present even after the unit has been unplugged.

Check the LED at the front edge of the power supply board. The unit is safe only if the LED is OFF. If the LED is ON, then DO NOT attempt any service on the unit.

This unit is to be serviced by qualified service personnel only. There are no user serviceable parts inside.

VIDEO DRIVER AND CRT

Potentially lethal voltages are present in this circuit. Do not attempt to service the CRT and Video Driver Board. Refer any service problems to the factory.

CIRCUIT BOARDS

The SR770 has four main printed circuit boards. The four boards shown contain most of the active circuitry of the unit. The CRT and video driver boards are mounted inside the CRT shield assembly. A front panel circuit board only has keypad contacts printed on it and holds no active components.

CPU BOARD

The CPU board contains the microprocessor system. All display, front panel, disk, and computer interfaces are on this board.

MICROPROCESSOR SYSTEM

The microprocessor, U101, is an 80C186 microcontroller which integrates a fast 16 bit processor, counter-timers, interrupt controller, DMA controller, and I/O decoding into a single component.

The 80C186 uses a 24.00 MHz crystal, X101, as its oscillator. The instruction clock cycle is 2 oscillator cycles or 12.0 MHz. The data and lower 16 bits of address are multiplexed on AD0-AD15. U201, U202, U203 latch the address A0-A19 at the beginning of each memory or I/O cycle. U204 and U205 are bidirectional data bus drivers which are active during the data read/write portion of each memory or I/O cycle.

The 80C186 can address 1 Mbyte of memory and 64k of I/O space. The memory is mapped into 4 256kbyte blocks. Each block can actually have 64k, 128k, or 256k of physical memory. Each block has 2 sockets, one for the low byte and one for the high byte of data.

U301 and U302 are 128kbyte EPROMS holding the program boot firmware. This memory is mapped at E0000H to FFFFFH (128k). U303 and U304 are 64kbyte data ROMS mapped at 80000H to 9FFFFH (128k).

U401 and U402 are 32kbyte CMOS static RAMs mapped at 00000H to 0FFFFH (64k). This memory is backed up by the battery. Q401 provides power down RAM protection. This memory is system memory.

U403 and U404 are also 32kbyte static RAMs. They are mapped at 40000H to 4FFFFH (64k) and are used as the display data memory. Up to 16k data points may be stored in this memory. Data stored in this memory may be graphed on the screen.

4 of the 7 80C186's peripheral chip select strobes are used by peripherals on the CPU board. -PCS0 is decoded into 16 I/O strobes which access the clock, keypad, keyboard, knob, printer port, etc. -PCS1 decodes the disk controller, the GPIB controller, and DMA acknowledge strobes. -PCS2 selects the UART and -PCS3 selects the video graphics controller. Whenever the video controller is accessed, the ARDY line is asserted (U504A) which puts the processor into a wait state. When the video controller acknowledges the data transfer by pulling -Video_Rdy low, the ARDY line is de-asserted (U805A and U815D) and the processor moves on to the next instruction.

Interrupts generated by peripherals on the CPU board are combined in U505 into a single prioritized interrupt. The highest priority pending interrupt will be encoded on U505's outputs and read via the status port, U608. The UART directly interrupts the processor since it can never be masked.

KEYPAD INTERFACE

The keypad is organized as 8 columns and 8 rows of switch closures. The conductive rubber keys provide the switch closures. U607 strobes the columns and U606 detects the switch closure. The diodes D601 - D608 prevent one column from affecting another. All of the outputs from U607 are set high and U606 is read periodically by the processor. As long as 00H is read, no key is pressed and the strobes are left on. When a non-zero byte is read, then the key strobes are activated individually in order to decode which key is down.

KEYBOARD INTERFACE

The PC keyboard interface uses U603 to convert serial data from the keyboard into a parallel byte for the processor to read. The data format from the keyboard is a leading start bit followed by 8 data bits. U603 is reset by a processor read. When a key is pressed, the bits are shifted into U603. When the start bit appears at the QH output, 7 bits of the data byte are in U603. U601 is the 9th bit of the shift register. When U601 clocks in the start bit, U601 must have the 8 bits of the data. U601 then latches the serial data in U601 and interrupts the processor.

Only keyboards which operate in the PC or 8088 mode will function with this interface.

SPIN KNOB

The knob is an optical encoder buffered by U612. Each transition of its outputs is clocked into U610 or U611 and generates an interrupt at the output of U602A. The processor keeps track of the knob's position continuously.

SPEAKER

The speaker is driven by a timer on the 80C186. The timer outputs a square wave which is enabled by U602B and drives the speaker through Q705.

CLOCK/CALENDAR

U702 is an MC146818 real time clock chip which keeps track of time and date. The time base is a 32.768 kHz oscillator made by U706. Both U702 and U706 are battery backed up.

PRINTER INTERFACE

The printer interface allows screen displays to be printed to Epson compatible printers. Output data is buffered by U703, an LS octal latch. Output control bits are buffered by the open collector driver U704, and input control bits are discriminated by U705C and U705D.

VIDEO GRAPHICS INTERFACE

The video graphics interface is centered around U810, an HD63484 graphics controller. The HD63484 generates the video sync signals, controls the video memory, and draws graphic primitives such as lines, circles, polygons,etc., and other high level functions. The HD63484 relieves the 80C186 from having to calculate each video image and greatly increases display speed.

U813 and U814 are 32kbyte RAMs which make up the 64k video memory. The video screen is 640H by 480V and requires 38,400 bytes of memory. The remaining memory is used to store patterns, fonts, and other graphic objects. The data and address are multiplexed and U811 and U182 are the address latches.

Data is read 16 bits at a time. When data is required for the display, the 16 bits of data are latched into U804 and U809 which are parallel to serial converters. The video data is then shifted out at 13.5 MHz and synchronized by U806B. U803C blanks the video data except during active display times.

Memory is accessed twice during each display cycle. The first access reads the 16 bits of video data for the current display cycle. The second access is used by the controller for drawing purposes. During the drawing access, data at any address may be read or written. This allows drawing to take place as fast as possible.

Commands and data are sent from the 80C186 to the HD63484 using a DMA channel. This allows the HD63484 to process commands without having to wait for the 80C186 to send them.

DISK CONTROLLER

U907 is a DP8473 disk controller which integrates all of the functions of the PC interface into a single IC. All motor controls, read and write signals, and data are all controlled by the DP8473. A DMA channel is used to send and receive data from the controller in order to satisfy the disk drive timing.

GPIB INTERFACE

The GPIB (IEEE-488) interface is provided by U902, a TMS9914A controller. U903 and U904 buffer data I/O to the GPIB connector. U902 is programmed to provide an interrupt to the processor whenever there is bus activity addressed to the unit.

RS232 INTERFACE

The SCN2641 UART, U905, provides all of the UART functions as well as baud rate generation. Standard baud rates up to 19.2k can be generated from the 3.6864 MHz clock. U906 buffers the outgoing data and control signals. Incoming signals are received by U705A and U705B. If the host computer asserts DTR, RS232 data output from the unit will cease.

The RS232 port is a DCE and may be connected to a PC using a standard serial cable (not a "null modem" cable).

EXPANSION CONNECTOR

All control of the data acquisition hardware is through the signals on the 30 pin expansion connector.

POWER SUPPLY BOARD

CAUTION: Dangerous voltages are present on this circuit board whenever the instrument is attached to an AC power source and the front panel power switch is "on".

Always disconnect the power cord and wait at least one minute before opening the unit. Check the LED at the front edge of the power supply board. The unit is safe only if the LED is OFF. If the LED is ON, then DO NOT attempt any service on the unit.

UNREGULATED POWER SUPPLIES

A power entry module, with RF line filter, is used to configure the unit for 100, 120, 220, or 240 VAC. The line filter reduces noise from the instrument and reduces the unit's susceptibility to line voltage noise. R1 is an inrush limiter to limit the turn on current and TS1 is a thermal switch which will interrupt the AC line if the heat sink temperature rises to 50°C.

Bridge rectifiers are used to provide unregulated DC at ±22V, ±18V and ±8V. Schottky diodes are used for all supplies to reduce rectifier losses.

Resistors provide a bleed current on all of the unregulated supply filter capacitors. Because of the large capacitances in this circuit, the time for the voltages to bleed to zero is about a minute after the power is turned off.

POWER SUPPLY REGULATORS

The voltage regulators provide outputs at +5V, -5V, ±15V, ±18V and ±12V. The ±5V regulators are designed to operate with a very low drop-out voltage.

U2 is a precision 5.00V reference which is used to set ±5V output voltages. This provides very accurate digital power supply outputs.

There are 2 +5V supplies, one to power the CPU board and disk drive (+5V_P), and one to power the DSP Logic Board (+5V_I).

The following description refers to the +5V_P supply but describes the +5V_I and -5V and supplies as well.

The main pass transistor is Q5. The base of this transistor is controlled so that the emitter will provide a low impedance source of 5 VDC. The current gain of Q5 remains large until the collector-emitter voltage drops to about 0.4 VDC, hence the low drop-out voltage of the regulator. The base of Q5 is driven by the emitter of Q6 which is driven by the output of the op amp, U3B. By comparing the output of the regulator to the 5.00V reference, the op amp maintains the regulator's output at 5.00 VDC. The current output from the regulator is measured by the 0.1 Ω resistor R10. If the current exceeds about 2 Amps, then the output of U3A turns on, pulling the sense input of U3B high, thereby turning off the regulator's output.

U11 and U12 are regulators for ±15 VDC. U6, U7 and U18 are the ±12V regulators. Since these supplies do not need to be accurate, output sensing is not used.

U9 and U10 provide ±18V sources which are not referenced to the digital ground (as are all of the supplies mentioned above). This allows the analog inputs board to establish a ground at the signal input without digital ground noise.

U1 provides power-up and power-down reset.

The 24 VDC brushless fan runs from the –18V unregulated supply.

DSP LOGIC BOARD

OVERVIEW

The DSP LOGIC BOARD takes a digital input from the A/D Converter on the Analog Input Board and performs all of the computations related to the measurement before it is displayed on the screen. This includes digital heterodyning (frequency shifting), digital filtering and downsampling, Fast Fourier Transforming, averaging, and output display processing (scaling, magnitude calc, log, sqrt, etc.) These functions are implemented within a system comprised of four functional blocks: the Digital Signal Processors (DSP's), the Trigger Processor, the Timing Signal Generator and the I/O Interface. Through the use of highly efficient algorithms, the system is capable of real-time heterodyning and filtering, and can compute a 512 point FFT in under 1.5 ms. FFT's can be computed on the incoming data faster than the time it takes to complete a time record. This is what accounts for the extremely high 100 kHz real-time bandwidth of the SR770.

The fifth functional block is the source generator. The source is synthesized, filtered and attenuated before being passed to the output connector.

DSP PROCESSORS

The SR770 utilizes two Motorola 24-bit DSP56001 DSP Chips. The two DSP's are configured almost identically, with minor differences reflecting the specific function of each DSP. Each DSP contains two external busses - a memory bus and a host processor bus. The memory bus is connected to 32K of 24 bit Static RAM (SRAM) as well as some decoding logic for access to I/O devices. The Host processor bus is connected to the main CPU Board via the I/O Interface on the DSP Logic Board. The CPU Board acts as the "host" processor to the DSP's and controls all of their functions. DSP firmware and commands are downloaded from the CPU Board to invoke different operating modes. Each DSP also has two dedicated serial ports: one for receiving, and one for transmitting. These ports are used for transferring partially processed data.

The first DSP processor, U101, is responsible for frequency shifting the input signal from the A/D converter, filtering and downsampling. In short, the first DSP Processor extracts a select portion of the frequency spectrum from the digitized input signal (for example the spectrum from 99.7 kHz to 99.8 kHz) and reduces the sampling rate of the resulting data stream to reflect the bandwidth of the selected frequency span. Recall that the sampling rate must be at least twice that of the frequency span. Data is received from the A/D Converter via its dedicated serial receive port. The results of the heterodyning, filtering and downsampling are passed on to the second DSP via the serial transmit port. Because data sent to the second DSP is in complex form, there are actually two data streams sent, one representing real data and the other representing imaginary data. U105 stores an output flag so that the second DSP can distinguish "real" data points from "imaginary" data points. U106 is a PAL which provides some decoding logic for I/O strobes and interrupt lines and also performs some computations in hardware for the first DSP.

The second DSP processor, U201, is responsible for FFT computations, trigger computations, averaging algorithms, and output display processing. Data from the first DSP is received by the second DSP via its serial receive port and stored in a buffer. FFT's are performed on the data in the buffer once the buffer is filled with a sufficient number of points. After the FFT is computed, phase corrections are made using information from the trigger circuitry (if trigger is enabled). The FFT is then averaged with previous FFT spectra (if averaging is enabled). Lastly, the spectra is prepared for display on the CRT screen. Depending upon the user's request, scaling, log or sqrt functions need to be performed on the FFT spectra.

TRIGGER

The Trigger function of the SR770 allows the user to control when the instrument will start taking data for the FFT computation. For example, a user wishes to examine the spectrum of a transient induced by a hammer blow to a mechanical structure. A transducer connected to the hammer provides a pulse upon impact of the hammer. That pulse can be used to "trigger" the start of data collection by the SR770 so that the resulting transient is captured in one FFT time record.

The Trigger input can be a TTL level signal or an analog signal. T301 provides some common-mode rejection for the trigger input. Relay K302 selects TTL or Analog Level Trigger. Relay K301 allows the trigger signal to come from the output

of the analog front-end amplifiers or the external "TRIGGER" front panel BNC. Trigger signals pass through the 74F86 XOR gate where it can be inverted if falling edge trigger slope is selected. TTL triggers proceed directly to the F86 XOR gate via some input protection. Analog level signals are first converted to a TTL signal via high-speed comparator U303 and then proceed to the F86 XOR gate.

At the heart of the trigger input is the analog high-speed comparator, U303 (LT1016). It's input is buffered by U301A and protected by resistor N301A and diodes D301 and D302. C301 provides high-frequency hysteresis when the output latch cannot respond fast enough, and U301B and U302A provide low-frequency hysteresis. R304 and N301B determine the level of hysteresis. The DC trigger level is set by the 8-bit DAC U513B. U515 buffers the DAC output and provides a DC offset to correct the offset from the anti-aliasing filter. U304 guarantees that triggers occur on the next rising edge of the output from XOR gate U302B. Flip-Flops U304B and U305A synchronize the trigger signal to the internal 30 MHz clock. Flip-Flop U305 latches the trigger signal and stays high until cleared. Flip-Flops U306A and U306B synchronize the trigger signal to the A/D sampling clock and DSP serial port.

TIMING SIGNAL GENERATOR

The timing signal generator provides all timing signals for the A/D Converter, Trigger Circuitry and DSP processor serial ports. U608 is a PAL which implements a 118 state 7-bit counter. U609 is also a PAL and implements a 118 state state-machine and generates all the timing signals needed on the DSP Logic Board. U610 is a high-speed latch used to latch the state of the timing generator when a trigger signal is detected.

I/O INTERFACE TO CPU BOARD

The I/O interface provides the communication pathway between the DSP Logic Board and the main CPU Board. U601 and U602 are buffers for the address and data bus connections. Both buffer chips are enabled only when the CPU Board is writing to the DSP Logic Board. This helps isolate the activity on the CPU Board from affecting circuitry on the DSP Logic Board. U603 and U604 are simple D-type latches used to hold configuration data for the DSP Logic Board. U605 is the main decoder PAL and generates all of the chip selects and strobes needed by the DSP Logic Board.

SOURCE GENERATOR

The source generator has its own digital signal processor, an ADSP-2105. The ADSP-2105 has its own ROM and RAM and runs on its own. Commands are passed to it via the 8 bit DAC data latch (U517). The ADSP-2105 computes the source waveforms, a point every 4 µs. The output points are serially shifted to U506, a 16 bit serial input DAC. The output frame sync is exactly the same as the input frame sync to the input A/D converter. Thus the source is synchronous with the input sampling.

The output of U506 is buffered and filtered to remove high frequency components. U513A is used as an 8 bit attenuator and U502 is a divide by 10 or 100 attenuator. U514 is a high current output buffer which provides the low output impedance.

ANALOG INPUT BOARD

OVERVIEW

The Analog Input Board provides the very important link between the user's input signal and the DSP processor. From the front panel BNC, the user's signal passes through a low distortion front-end amplifier, gain stages, attenuators, anti-aliasing filter, and finally an A/D Converter. Once converted to digital form, the input signal is ready to be processed by the Digital Signal Processors.

INPUT AMPLIFIER

The goal of any measurement instrument is to perform some given measurement while affecting the quantities to be measured as little as possible. As such, the input amplifier is often the most critical stage in the entire signal path. The design of the front end input amplifier in the SR770 was driven by an effort to provide optimum performance in the following areas: input voltage noise, input current noise, input capacitance, harmonic distortion, and common mode rejection (CMR). To provide such performance, a FET input differential amplifier with common-mode feedback architecture was chosen. The input signal is first passed through a series of relays to select input mode, input coupling and input attenuation. The -30 dB input attenuator formed by resistors R102-R105 serves to attenuate very large signals that enter the instrument but also serves a dual purpose of providing protection to the input FETs in the presence of very high voltages (> 75Vpk). To prevent damage to the input FETs, the input voltage is monitored by comparator U105. High voltages cause the input attenuator to be automatically engaged regardless of the user gain setting at the front panel. Resistors R107 and R108 provide some input protection to the input FETs, with only a slight penalty in input voltage noise. The input FETs U100A and U100B are extremely low-noise matched FET's with a voltage input noise of approximately 3.5 nv/√Hz. To improve distortion performance, the input FETs are cascoded to maintain a constant drain-source voltage across each FET. This prevents modulation of the drain-source voltage by the input voltage. U104 senses the source voltage and maintains the same voltage at the drain with some DC offset determined by resistors R113-R116 and R120-R123. U103 provides common-mode feedback and maintains a constant drain current in each FET. The gain of the front end is either 2 or 10 as selected by relay K107. When a gain of 10 is selected, the offset and CMR are adjusted via P102 and P101 respectively. When a gain of 2 is selected, offset and CMR are adjusted via P104 and P103 respectively.

GAIN STAGES AND ATTENUATORS

Collectively, the front end amplifier, gain stages and attenuators provide attenuation from -12dB to 0 dB and gain from +2dB to +60dB in 2dB steps. This is accomplished through the front-end amplifier, two gain stages and a resistive ladder attenuator.

The first gain stage is configurable as either a +14dB or +20dB amplifier. The second stage provides only one gain setting of +20dB. To achieve the desired gain, the front end amplifier and these two gain stages are cascaded together. If any particular gain stage is not needed, it's input is grounded. This maintains a cleaner power supply, and reduces the ability of potentially large signals in unused gain stages from interacting with the input signal to cause harmonic distortion. U206 forms an analog multiplexer and selects one of the three gain stage outputs or an attenuated front end amplifier output. This enables several different overall gains to be realized while utilizing a minimum number of gain stages. The input signal is never passed through a gain stage unnecessarily. This improves the noise and harmonic distortion performance of the overall amplifier. Referenced to the input of the front end amplifier, gains of -2dB, +6dB, +20dB, +34dB, +40dB, +54dB and +60dB are realizable.

The resistive ladder attenuator provides attenuation from 0dB to -12dB in 2 dB steps. This improves the resolution with which gain can be selected. At the output of the attenuator is U211, which detects overloads.

ANTI-ALIASING FILTER

To prevent aliasing, the input signal passes through a low-pass filter so that all frequency components greater than half the sampling frequency are attenuated by at least 96 dB. This is accomplished with an 8-zero 9-pole elliptical low pass filter. The pass band of this filter is DC to 100kHz with a ripple of 0.25 dB. The stopband begins at 156 kHz. Stopband attenuation is nominally 100 dB.

The architecture of the filter is based on a singly terminated passive LC ladder filter. L's are simulated with active gyrators formed by op-amp pairs. Passive LC ladder filters have the special characteristic of being very tolerant of variations in component values. Because no section of the ladder is completely isolated from the other, a change in value of any single component affects the entire ladder. The design of the LC ladder however, is such that the characteristics of the rest of the ladder will shift to account for the change in such a way as to minimize its effect on the ladder. Not only does this loosen the requirement for extremely high accuracy resistors and capacitors, but it also makes the filter extremely stable despite wide temperature variations. As such, the anti-aliasing filter used in the SR770 does not ever require calibration to meets its specifications.

Following the anti-aliasing filter is a gain stage to buffer the output of the filter and to provide a small amount of gain before going to the A/D Converter. To minimize offset, 8-bit DAC U307 provides an offset voltage to compensate for offsets accumulated in the gain stages. U309 sends the output of the filter to the DSP Logic Board for internal triggering purposes. Diodes D301-D304 provide input protection for the A/D converter.

A/D CONVERTER

The A/D Converter converts the final signal to a digital data stream. Conversion takes place at a rate of 256,000 samples per second. A Burr-Brown PCM1750 18-bit A/D Converter is used for this purpose.

I/O INTERFACE

The Analog Input Board communicates with the CPU Board via its I/O Interface. IC's U504-U506 form a 24 bit shift register and latch. Data is shifted in serially from the CPU Board and latched to internal latches. The outputs of the latches are used to control relays, switches, etc. U503 opto-isolates the signals for the shift registers to prevent DSP Logic Board Noise from entering the Analog Input Board. Timing signals for the A/D Converter are received via pulse transformers T501-T503 configured as common-mode rejection transformers to isolate the analog and digital grounds.

POWER

Several voltages are generated on the Analog Input Board locally. ±15V is generated for most of the analog IC's. A dedicated ±15V supply is also generated for the front-end amplifier. ±5V is generated for the A/D Converter as well as a digital +5V for the digital IC's that provide timing signals to the A/D. Lastly, another +5V supply is generated for all other digital logic and +12V for relays.

CPU Board Parts List

REF.	SRS PART#	VALUE	DESCRIPTION
BT701	6-00001-612	BR-2/3A 2PIN PC	Battery
C 101	5-00177-501	30P	Capacitor, Ceramic Disc, 50V, 10%, SL
C 102	5-00215-501	20P	Capacitor, Ceramic Disc, 50V, 10%, SL
C 103	0-00772-000	1.5" WIRE	Hardware, Misc.
C 501	5-00215-501	20P	Capacitor, Ceramic Disc, 50V, 10%, SL
C 601	5-00033-520	47U	Capacitor, Electrolytic, 16V, 20%, Rad
C 602	5-00012-501	330P	Capacitor, Ceramic Disc, 50V, 10%, SL
C 603	5-00012-501	330P	Capacitor, Ceramic Disc, 50V, 10%, SL
C 701	5-00064-513	.0047U	Capacitor, Mylar/Poly, 50V, 5%, Rad
C 704	5-00012-501	330P	Capacitor, Ceramic Disc, 50V, 10%, SL
C 705	5-00012-501	330P	Capacitor, Ceramic Disc, 50V, 10%, SL
C 706	5-00061-513	.001U	Capacitor, Mylar/Poly, 50V, 5%, Rad
C 801	5-00178-501	62P	Capacitor, Ceramic Disc, 50V, 10%, SL
C 802	5-00178-501	62P	Capacitor, Ceramic Disc, 50V, 10%, SL
C 803	5-00100-517	2.2U	Capacitor, Tantalum, 35V, 20%, Rad
C 804	5-00225-548	.1U AXIAL	Capacitor, Ceramic, 50V,+80/-20% Z5U AX
C 805	5-00100-517	2.2U	Capacitor, Tantalum, 35V, 20%, Rad
C 806	5-00100-517	2.2U	Capacitor, Tantalum, 35V, 20%, Rad
C 807	5-00100-517	2.2U	Capacitor, Tantalum, 35V, 20%, Rad
C 808	5-00100-517	2.2U	Capacitor, Tantalum, 35V, 20%, Rad
C 810	5-00023-529	.1U	Cap, Monolythic Ceramic, 50V, 20%, Z5U
C 811	5-00232-520	470U	Capacitor, Electrolytic, 16V, 20%, Rad
C 901	5-00003-501	10P	Capacitor, Ceramic Disc, 50V, 10%, SL
C 902	5-00003-501	10P	Capacitor, Ceramic Disc, 50V, 10%, SL
C 903	5-00061-513	.001U	Capacitor, Mylar/Poly, 50V, 5%, Rad
C 904	5-00223-513	.027U	Capacitor, Mylar/Poly, 50V, 5%, Rad
C 905	5-00068-513	.047U	Capacitor, Mylar/Poly, 50V, 5%, Rad
C 906	5-00061-513	.001U	Capacitor, Mylar/Poly, 50V, 5%, Rad
C 907	5-00012-501	330P	Capacitor, Ceramic Disc, 50V, 10%, SL
C 908	5-00012-501	330P	Capacitor, Ceramic Disc, 50V, 10%, SL
C 909	5-00178-501	62P	Capacitor, Ceramic Disc, 50V, 10%, SL
C 910	5-00178-501	62P	Capacitor, Ceramic Disc, 50V, 10%, SL
C 1001	5-00225-548	.1U AXIAL	Capacitor, Ceramic, 50V,+80/-20% Z5U AX
C 1002	5-00225-548	.1U AXIAL	Capacitor, Ceramic, 50V,+80/-20% Z5U AX
C 1003	5-00225-548	.1U AXIAL	Capacitor, Ceramic, 50V,+80/-20% Z5U AX
C 1004	5-00225-548	.1U AXIAL	Capacitor, Ceramic, 50V,+80/-20% Z5U AX
C 1005	5-00100-517	2.2U	Capacitor, Tantalum, 35V, 20%, Rad
C 1006	5-00225-548	.1U AXIAL	Capacitor, Ceramic, 50V,+80/-20% Z5U AX
C 1007	5-00225-548	.1U AXIAL	Capacitor, Ceramic, 50V,+80/-20% Z5U AX
C 1008	5-00225-548	.1U AXIAL	Capacitor, Ceramic, 50V,+80/-20% Z5U AX
C 1009	5-00225-548	.1U AXIAL	Capacitor, Ceramic, 50V,+80/-20% Z5U AX
C 1010	5-00225-548	.1U AXIAL	Capacitor, Ceramic, 50V,+80/-20% Z5U AX
C 1011	5-00225-548	.1U AXIAL	Capacitor, Ceramic, 50V,+80/-20% Z5U AX
C 1012	5-00225-548	.1U AXIAL	Capacitor, Ceramic, 50V,+80/-20% Z5U AX
C 1013	5-00225-548	.1U AXIAL	Capacitor, Ceramic, 50V,+80/-20% Z5U AX
C 1014	5-00100-517	2.2U	Capacitor, Tantalum, 35V, 20%, Rad
C 1015	5-00225-548	.1U AXIAL	Capacitor, Ceramic, 50V,+80/-20% Z5U AX
C 1016	5-00225-548	.1U AXIAL	Capacitor, Ceramic, 50V,+80/-20% Z5U AX
C 1017	5-00225-548	.1U AXIAL	Capacitor, Ceramic, 50V,+80/-20% Z5U AX

PARTS LIST

REF.	SRS PART#	VALUE	DESCRIPTION
C 1018	5-00225-548	.1U AXIAL	Capacitor, Ceramic, 50V,+80/-20% Z5U AX
C 1019	5-00225-548	.1U AXIAL	Capacitor, Ceramic, 50V,+80/-20% Z5U AX
C 1020	5-00225-548	.1U AXIAL	Capacitor, Ceramic, 50V,+80/-20% Z5U AX
C 1021	5-00225-548	.1U AXIAL	Capacitor, Ceramic, 50V,+80/-20% Z5U AX
C 1022	5-00225-548	.1U AXIAL	Capacitor, Ceramic, 50V,+80/-20% Z5U AX
C 1023	5-00100-517	2.2U	Capacitor, Tantalum, 35V, 20%, Rad
C 1024	5-00225-548	.1U AXIAL	Capacitor, Ceramic, 50V,+80/-20% Z5U AX
C 1025	5-00225-548	.1U AXIAL	Capacitor, Ceramic, 50V,+80/-20% Z5U AX
C 1026	5-00100-517	2.2U	Capacitor, Tantalum, 35V, 20%, Rad
C 1027	5-00225-548	.1U AXIAL	Capacitor, Ceramic, 50V,+80/-20% Z5U AX
C 1028	5-00225-548	.1U AXIAL	Capacitor, Ceramic, 50V,+80/-20% Z5U AX
C 1029	5-00225-548	.1U AXIAL	Capacitor, Ceramic, 50V,+80/-20% Z5U AX
C 1030	5-00225-548	.1U AXIAL	Capacitor, Ceramic, 50V,+80/-20% Z5U AX
C 1031	5-00225-548	.1U AXIAL	Capacitor, Ceramic, 50V,+80/-20% Z5U AX
C 1032	5-00225-548	.1U AXIAL	Capacitor, Ceramic, 50V,+80/-20% Z5U AX
C 1033	5-00225-548	.1U AXIAL	Capacitor, Ceramic, 50V,+80/-20% Z5U AX
C 1034	5-00225-548	.1U AXIAL	Capacitor, Ceramic, 50V,+80/-20% Z5U AX
C 1035	5-00225-548	.1U AXIAL	Capacitor, Ceramic, 50V,+80/-20% Z5U AX
C 1036	5-00225-548	.1U AXIAL	Capacitor, Ceramic, 50V,+80/-20% Z5U AX
C 1037	5-00225-548	.1U AXIAL	Capacitor, Ceramic, 50V,+80/-20% Z5U AX
C 1038	5-00100-517	2.2U	Capacitor, Tantalum, 35V, 20%, Rad
C 1039	5-00225-548	.1U AXIAL	Capacitor, Ceramic, 50V,+80/-20% Z5U AX
C 1040	5-00225-548	.1U AXIAL	Capacitor, Ceramic, 50V,+80/-20% Z5U AX
C 1041	5-00225-548	.1U AXIAL	Capacitor, Ceramic, 50V,+80/-20% Z5U AX
C 1042	5-00100-517	2.2U	Capacitor, Tantalum, 35V, 20%, Rad
C 1043	5-00225-548	.1U AXIAL	Capacitor, Ceramic, 50V,+80/-20% Z5U AX
C 1044	5-00225-548	.1U AXIAL	Capacitor, Ceramic, 50V,+80/-20% Z5U AX
CU901	5-00114-501	200P	Capacitor, Ceramic Disc, 50V, 10%, SL
D 100	3-00391-301	MBR360	Diode
D 401	3-00004-301	1N4148	Diode
D 601	3-00004-301	1N4148	Diode
D 602	3-00004-301	1N4148	Diode
D 603	3-00004-301	1N4148	Diode
D 604	3-00004-301	1N4148	Diode
D 605	3-00004-301	1N4148	Diode
D 606	3-00004-301	1N4148	Diode
D 607	3-00004-301	1N4148	Diode
D 608	3-00004-301	1N4148	Diode
D 701	3-00203-301	1N5711	Diode
D 702	3-00004-301	1N4148	Diode
D 703	3-00004-301	1N4148	Diode
D 704	3-00004-301	1N4148	Diode
D 705	3-00004-301	1N4148	Diode
D 810	3-00820-301	1N5228B	Diode
JP201	0-00772-000	1.5" WIRE	Hardware, Misc.
JP301	0-00772-000	1.5" WIRE	Hardware, Misc.
JP302	0-00772-000	1.5" WIRE	Hardware, Misc.
JP303	0-00772-000	1.5" WIRE	Hardware, Misc.
JP601	1-00113-100	DIN 5	Connector, Misc.
JP603	0-00772-000	1.5" WIRE	Hardware, Misc.
JP702	1-00083-130	26 PIN DIL	Connector, Male

REF.	SRS PART#	VALUE	DESCRIPTION
JP801	1-00035-130	20 PIN DIL	Connector, Male
JP802	0-00772-000	1.5" WIRE	Hardware, Misc.
JP803	1-00086-130	3 PIN SI	Connector, Male
JP901A	1-00207-133	30 PIN DRA	Connector, Male, Right Angle
JP901B	1-00209-133	34 PIN DRA	Connector, Male, Right Angle
JP902	1-00238-161	GPIB SHIELDED	Connector, IEEE488, Reverse, R/A, Female
JP903	1-00016-160	RS232 25 PIN D	Connector, D-Sub, Right Angle PC, Female
JP1000	1-00170-130	26 PIN ELH	Connector, Male
JP1002	1-00039-116	5 PIN, WHITE	Header, Amp, MTA-156
N 101	4-00587-425	10KX7	Resistor Network SIP 1/4W 2% (Common)
N 102	4-00334-425	10KX5	Resistor Network SIP 1/4W 2% (Common)
N 501	4-00334-425	10KX5	Resistor Network SIP 1/4W 2% (Common)
N 601	4-00227-425	22KX9	Resistor Network SIP 1/4W 2% (Common)
N 701	4-00270-425	1.0KX5	Resistor Network SIP 1/4W 2% (Common)
N 801	4-00334-425	10KX5	Resistor Network SIP 1/4W 2% (Common)
N 901	4-00221-425	150X5	Resistor Network SIP 1/4W 2% (Common)
N 902	4-00244-421	10KX4	Res. Network, SIP, 1/4W,2% (Isolated)
PC1	7-00809-701	003/015 CONTRLR	Printed Circuit Board
Q 401	3-00026-325	2N5210	Transistor, TO-92 Package
Q 701	3-00022-325	2N3906	Transistor, TO-92 Package
Q 702	3-00021-325	2N3904	Transistor, TO-92 Package
Q 703	3-00021-325	2N3904	Transistor, TO-92 Package
Q 705	3-00022-325	2N3906	Transistor, TO-92 Package
Q 810	3-00022-325	2N3906	Transistor, TO-92 Package
Q 811	3-00021-325	2N3904	Transistor, TO-92 Package
R 401	4-00034-401	10K	Resistor, Carbon Film, 1/4W, 5%
R 402	4-00079-401	4.7K	Resistor, Carbon Film, 1/4W, 5%
R 502	4-00034-401	10K	Resistor, Carbon Film, 1/4W, 5%
R 601	4-00034-401	10K	Resistor, Carbon Film, 1/4W, 5%
R 602	4-00034-401	10K	Resistor, Carbon Film, 1/4W, 5%
R 701	4-00088-401	51K	Resistor, Carbon Film, 1/4W, 5%
R 702	4-00021-401	1.0K	Resistor, Carbon Film, 1/4W, 5%
R 703	4-00034-401	10K	Resistor, Carbon Film, 1/4W, 5%
R 704	4-00034-401	10K	Resistor, Carbon Film, 1/4W, 5%
R 705	4-00034-401	10K	Resistor, Carbon Film, 1/4W, 5%
R 706	4-00034-401	10K	Resistor, Carbon Film, 1/4W, 5%
R 707	4-00063-401	3.0K	Resistor, Carbon Film, 1/4W, 5%
R 710	4-00080-401	47	Resistor, Carbon Film, 1/4W, 5%
R 711	4-00080-401	47	Resistor, Carbon Film, 1/4W, 5%
R 712	4-00021-401	1.0K	Resistor, Carbon Film, 1/4W, 5%
R 713	4-00056-401	22	Resistor, Carbon Film, 1/4W, 5%
R 714	4-00079-401	4.7K	Resistor, Carbon Film, 1/4W, 5%
R 801	4-00022-401	1.0M	Resistor, Carbon Film, 1/4W, 5%
R 802	4-00062-401	270	Resistor, Carbon Film, 1/4W, 5%
R 808	4-00060-401	240	Resistor, Carbon Film, 1/4W, 5%
R 809	4-00081-401	470	Resistor, Carbon Film, 1/4W, 5%
R 810	4-00031-401	100	Resistor, Carbon Film, 1/4W, 5%
R 811	4-00021-401	1.0K	Resistor, Carbon Film, 1/4W, 5%
R 812	4-00021-401	1.0K	Resistor, Carbon Film, 1/4W, 5%
R 813	4-00053-401	200	Resistor, Carbon Film, 1/4W, 5%
R 814	4-00038-401	120	Resistor, Carbon Film, 1/4W, 5%

PARTS LIST

REF.	SRS PART#	VALUE	DESCRIPTION
R 901	4-00273-401	5.6K	Resistor, Carbon Film, 1/4W, 5%
R 904	4-00090-401	560	Resistor, Carbon Film, 1/4W, 5%
R 905	4-00090-401	560	Resistor, Carbon Film, 1/4W, 5%
R 911	4-00022-401	1.0M	Resistor, Carbon Film, 1/4W, 5%
R 912	4-00062-401	270	Resistor, Carbon Film, 1/4W, 5%
R 913	4-00021-401	1.0K	Resistor, Carbon Film, 1/4W, 5%
SO101	1-00108-150	PLCC 68 TH	Socket, THRU-HOLE
SO301	1-00156-150	32 PIN 600 MIL	Socket, THRU-HOLE
SO302	1-00156-150	32 PIN 600 MIL	Socket, THRU-HOLE
SO303	1-00156-150	32 PIN 600 MIL	Socket, THRU-HOLE
SO304	1-00156-150	32 PIN 600 MIL	Socket, THRU-HOLE
SO907	1-00232-150	52 PLCC TH	Socket, THRU-HOLE
U 101	3-00354-360	80C186-12	Integrated Circuit (Surface Mount Pkg)
U 201	3-00340-340	74ALS373	Integrated Circuit (Thru-hole Pkg)
U 202	3-00340-340	74ALS373	Integrated Circuit (Thru-hole Pkg)
U 203	3-00340-340	74ALS373	Integrated Circuit (Thru-hole Pkg)
U 204	3-00341-340	74ALS245	Integrated Circuit (Thru-hole Pkg)
U 205	3-00341-340	74ALS245	Integrated Circuit (Thru-hole Pkg)
U 206	3-00342-340	74ALS138	Integrated Circuit (Thru-hole Pkg)
U 207	3-00343-340	74ALS32	Integrated Circuit (Thru-hole Pkg)
U 208	3-00344-340	74ALS08	Integrated Circuit (Thru-hole Pkg)
U 401	3-00299-341	32KX8-70L	STATIC RAM, I.C.
U 402	3-00299-341	32KX8-70L	STATIC RAM, I.C.
U 403	3-00299-341	32KX8-70L	STATIC RAM, I.C.
U 404	3-00299-341	32KX8-70L	STATIC RAM, I.C.
U 501	3-00342-340	74ALS138	Integrated Circuit (Thru-hole Pkg)
U 502	3-00342-340	74ALS138	Integrated Circuit (Thru-hole Pkg)
U 503	3-00342-340	74ALS138	Integrated Circuit (Thru-hole Pkg)
U 504	3-00049-340	74HC74	Integrated Circuit (Thru-hole Pkg)
U 505	3-00347-340	74LS148	Integrated Circuit (Thru-hole Pkg)
U 506	3-00259-340	74HCT373	Integrated Circuit (Thru-hole Pkg)
U 601	3-00049-340	74HC74	Integrated Circuit (Thru-hole Pkg)
U 602	3-00348-340	74HC20	Integrated Circuit (Thru-hole Pkg)
U 603	3-00265-340	74HC595	Integrated Circuit (Thru-hole Pkg)
U 606	3-00044-340	74HC244	Integrated Circuit (Thru-hole Pkg)
U 607	3-00046-340	74HC374	Integrated Circuit (Thru-hole Pkg)
U 608	3-00044-340	74HC244	Integrated Circuit (Thru-hole Pkg)
U 609	3-00046-340	74HC374	Integrated Circuit (Thru-hole Pkg)
U 610	3-00049-340	74HC74	Integrated Circuit (Thru-hole Pkg)
U 611	3-00049-340	74HC74	Integrated Circuit (Thru-hole Pkg)
U 612	3-00039-340	74HC14	Integrated Circuit (Thru-hole Pkg)
U 701	3-00051-340	74HCU04	Integrated Circuit (Thru-hole Pkg)
U 702	3-00900-340	DS12C887	Integrated Circuit (Thru-hole Pkg)
U 703	3-00300-340	74LS374	Integrated Circuit (Thru-hole Pkg)
U 704	3-00263-340	DS75451N	Integrated Circuit (Thru-hole Pkg)
U 705	3-00110-340	MC1489	Integrated Circuit (Thru-hole Pkg)
U 801	3-00051-340	74HCU04	Integrated Circuit (Thru-hole Pkg)
U 802	3-00171-340	74HC191	Integrated Circuit (Thru-hole Pkg)
U 803	3-00277-340	74HC11	Integrated Circuit (Thru-hole Pkg)
U 804	3-00351-340	74HCT299	Integrated Circuit (Thru-hole Pkg)
U 805	3-00280-340	74HC10	Integrated Circuit (Thru-hole Pkg)

REF.	SRS PART#	VALUE	DESCRIPTION
U 806	3-00049-340	74HC74	Integrated Circuit (Thru-hole Pkg)
U 807	3-00274-340	74AC74	Integrated Circuit (Thru-hole Pkg)
U 808	3-00303-340	74HC164	Integrated Circuit (Thru-hole Pkg)
U 809	3-00351-340	74HCT299	Integrated Circuit (Thru-hole Pkg)
U 810	3-00598-340	63484P-98	Integrated Circuit (Thru-hole Pkg)
U 811	3-00046-340	74HC374	Integrated Circuit (Thru-hole Pkg)
U 812	3-00046-340	74HC374	Integrated Circuit (Thru-hole Pkg)
U 813	3-00299-341	32KX8-70L	STATIC RAM, I.C.
U 814	3-00299-341	32KX8-70L	STATIC RAM, I.C.
U 815	3-00262-340	74HC86	Integrated Circuit (Thru-hole Pkg)
U 901	3-00350-340	74ALS04	Integrated Circuit (Thru-hole Pkg)
U 902	3-00645-340	NAT9914BPD	Integrated Circuit (Thru-hole Pkg)
U 903	3-00078-340	DS75160A	Integrated Circuit (Thru-hole Pkg)
U 904	3-00079-340	DS75161A	Integrated Circuit (Thru-hole Pkg)
U 905	3-00247-340	SCN2641	Integrated Circuit (Thru-hole Pkg)
U 906	3-00109-340	MC1488	Integrated Circuit (Thru-hole Pkg)
U 907	3-00596-360	DP8473AV	Integrated Circuit (Surface Mount Pkg)
U 908	3-00040-340	74HC157	Integrated Circuit (Thru-hole Pkg)
X 101	6-00068-620	24.000 MHZ	Crystal
X 801	6-00069-620	13.5168 MHZ	Crystal
X 901	6-00068-620	24.000 MHZ	Crystal
X 902	6-00037-620	3.6864 MHZ	Crystal
Z 0	0-00126-053	3-1/2" #24	Wire #24 UL1007 Strip 1/4x1/4 Tin
Z 0	0-00479-055	1.5"X#30 ORA	Wire, Other
Z 0	1-00136-171	26 COND	Cable Assembly, Ribbon
Z 0	1-00137-165	25 PIN IDC	Connector, D-Sub, Female

Power Supply Parts List

REF.	SRS PART#	VALUE	DESCRIPTION
C 1	5-00124-526	5600U	Capacitor, Electrolytic, 35V, 20%, Rad
C 2	5-00124-526	5600U	Capacitor, Electrolytic, 35V, 20%, Rad
C 3	5-00228-526	15000U	Capacitor, Electrolytic, 35V, 20%, Rad
C 4	5-00228-526	15000U	Capacitor, Electrolytic, 35V, 20%, Rad
C 5	5-00230-550	47000U	Capacitor, Electrolytic, 10V, 20%, Rad
C 6	5-00229-521	15000U	Capacitor, Electrolytic, 25V, 20%, Rad
C 7	5-00023-529	.1U	Cap, Monolythic Ceramic, 50V, 20%, Z5U
C 8	5-00127-524	2.2U	Capacitor, Tantalum, 50V, 20%, Rad
C 9	5-00038-509	10U	Capacitor, Electrolytic, 50V, 20%, Rad
C 10	5-00027-503	.01U	Capacitor, Ceramic Disc, 50V, 20%, Z5U
C 11	5-00002-501	100P	Capacitor, Ceramic Disc, 50V, 10%, SL
C 12	5-00027-503	.01U	Capacitor, Ceramic Disc, 50V, 20%, Z5U
C 13	5-00002-501	100P	Capacitor, Ceramic Disc, 50V, 10%, SL
C 16	5-00127-524	2.2U	Capacitor, Tantalum, 50V, 20%, Rad
C 17	5-00127-524	2.2U	Capacitor, Tantalum, 50V, 20%, Rad
C 18	5-00127-524	2.2U	Capacitor, Tantalum, 50V, 20%, Rad
C 19	5-00192-542	22U MIN	Cap, Mini Electrolytic, 50V, 20% Radial
C 20	5-00127-524	2.2U	Capacitor, Tantalum, 50V, 20%, Rad
C 21	5-00127-524	2.2U	Capacitor, Tantalum, 50V, 20%, Rad
C 23	5-00192-542	22U MIN	Cap, Mini Electrolytic, 50V, 20% Radial
C 24	5-00127-524	2.2U	Capacitor, Tantalum, 50V, 20%, Rad

PARTS LIST

REF.	SRS PART#	VALUE	DESCRIPTION
C 26	5-00192-542	22U MIN	Cap, Mini Electrolytic, 50V, 20% Radial
C 27	5-00127-524	2.2U	Capacitor, Tantalum, 50V, 20%, Rad
C 28	5-00192-542	22U MIN	Cap, Mini Electrolytic, 50V, 20% Radial
C 29	5-00127-524	2.2U	Capacitor, Tantalum, 50V, 20%, Rad
C 30	5-00192-542	22U MIN	Cap, Mini Electrolytic, 50V, 20% Radial
C 31	5-00127-524	2.2U	Capacitor, Tantalum, 50V, 20%, Rad
C 32	5-00192-542	22U MIN	Cap, Mini Electrolytic, 50V, 20% Radial
C 33	5-00127-524	2.2U	Capacitor, Tantalum, 50V, 20%, Rad
C 34	5-00127-524	2.2U	Capacitor, Tantalum, 50V, 20%, Rad
D 2	3-00391-301	MBR360	Diode
D 3	3-00391-301	MBR360	Diode
D 4	3-00391-301	MBR360	Diode
D 5	3-00391-301	MBR360	Diode
D 6	3-00391-301	MBR360	Diode
D 7	3-00391-301	MBR360	Diode
D 8	3-00391-301	MBR360	Diode
D 9	3-00391-301	MBR360	Diode
D 12	3-00004-301	1N4148	Diode
D 13	3-00004-301	1N4148	Diode
D 15	3-00391-301	MBR360	Diode
D 16	3-00001-301	1N4001	Diode
D 17	3-00001-301	1N4001	Diode
D 18	3-00001-301	1N4001	Diode
D 19	3-00001-301	1N4001	Diode
D 20	3-00001-301	1N4001	Diode
D 30	3-00479-301	MUR410	Diode
D 31	3-00479-301	MUR410	Diode
D 32	3-00479-301	MUR410	Diode
D 33	3-00479-301	MUR410	Diode
D 34	3-00391-301	MBR360	Diode
D 35	3-00391-301	MBR360	Diode
D 36	3-00391-301	MBR360	Diode
D 37	3-00391-301	MBR360	Diode
D 38	3-00001-301	1N4001	Diode
DS1	3-00011-303	RED	LED, T1 Package
JP1	1-00039-116	5 PIN, WHITE	Header, Amp, MTA-156
JP2	1-00116-130	4 PIN DI DISK	Connector, Male
JP3	1-00119-116	3 PIN, WHITE	Header, Amp, MTA-156
JP4	1-00171-130	34 PIN ELH	Connector, Male
JP5	1-00086-130	3 PIN SI	Connector, Male
JP6	1-00086-130	3 PIN SI	Connector, Male
PC1	7-00354-701	4	Printed Circuit Board
Q 3	3-00021-325	2N3904	Transistor, TO-92 Package
Q 4	3-00021-325	2N3904	Transistor, TO-92 Package
Q 5	3-00257-329	TIP41B	Voltage Reg., TO-220 (TAB) Package
Q 6	3-00378-329	TIP102	Voltage Reg., TO-220 (TAB) Package
Q 7	3-00378-329	TIP102	Voltage Reg., TO-220 (TAB) Package
Q 8	3-00257-329	TIP41B	Voltage Reg., TO-220 (TAB) Package
R 3	4-00034-401	10K	Resistor, Carbon Film, 1/4W, 5%
R 4	4-00032-401	100K	Resistor, Carbon Film, 1/4W, 5%
R 5	4-00034-401	10K	Resistor, Carbon Film, 1/4W, 5%

REF.	SRS PART#	VALUE	DESCRIPTION
R 6	4-00046-401	2.0M	Resistor, Carbon Film, 1/4W, 5%
R 7	4-00065-401	3.3K	Resistor, Carbon Film, 1/4W, 5%
R 8	4-00021-401	1.0K	Resistor, Carbon Film, 1/4W, 5%
R 9	4-00021-401	1.0K	Resistor, Carbon Film, 1/4W, 5%
R 10	4-00436-409	0.1	Resistor, Wire Wound
R 11	4-00446-407	47.5K	Resistor, Metal Film, 1/8W, 1%, 50PPM
R 12	4-00054-401	200K	Resistor, Carbon Film, 1/4W, 5%
R 13	4-00034-401	10K	Resistor, Carbon Film, 1/4W, 5%
R 14	4-00034-401	10K	Resistor, Carbon Film, 1/4W, 5%
R 15	4-00021-401	1.0K	Resistor, Carbon Film, 1/4W, 5%
R 16	4-00021-401	1.0K	Resistor, Carbon Film, 1/4W, 5%
R 17	4-00436-409	0.1	Resistor, Wire Wound
R 18	4-00770-407	38.3K	Resistor, Metal Film, 1/8W, 1%, 50PPM
R 19	4-00054-401	200K	Resistor, Carbon Film, 1/4W, 5%
R 20	4-00034-401	10K	Resistor, Carbon Film, 1/4W, 5%
R 21	4-00034-401	10K	Resistor, Carbon Film, 1/4W, 5%
R 30	4-00360-401	430	Resistor, Carbon Film, 1/4W, 5%
R 31	4-00048-401	2.2K	Resistor, Carbon Film, 1/4W, 5%
R 32	4-00360-401	430	Resistor, Carbon Film, 1/4W, 5%
R 33	4-00027-401	1.5K	Resistor, Carbon Film, 1/4W, 5%
R 34	4-00027-401	1.5K	Resistor, Carbon Film, 1/4W, 5%
R 35	4-00185-407	4.02K	Resistor, Metal Film, 1/8W, 1%, 50PPM
R 36	4-00185-407	4.02K	Resistor, Metal Film, 1/8W, 1%, 50PPM
R 37	4-00522-407	243	Resistor, Metal Film, 1/8W, 1%, 50PPM
R 38	4-00517-407	3.57K	Resistor, Metal Film, 1/8W, 1%, 50PPM
R 39	4-00522-407	243	Resistor, Metal Film, 1/8W, 1%, 50PPM
R 40	4-00517-407	3.57K	Resistor, Metal Film, 1/8W, 1%, 50PPM
T 1	1-00152-116	11 PIN, WHITE	Header, Amp, MTA-156
U 1	3-00039-340	74HC14	Integrated Circuit (Thru-hole Pkg)
U 2	3-00319-340	AD586JN	Integrated Circuit (Thru-hole Pkg)
U 3	3-00088-340	LF353	Integrated Circuit (Thru-hole Pkg)
U 4	3-00088-340	LF353	Integrated Circuit (Thru-hole Pkg)
U 5	3-00119-329	7905	Voltage Reg., TO-220 (TAB) Package
U 6	3-00346-329	7812	Voltage Reg., TO-220 (TAB) Package
U 7	3-00346-329	7812	Voltage Reg., TO-220 (TAB) Package
U 8	3-00330-329	7912	Voltage Reg., TO-220 (TAB) Package
U 9	3-00149-329	LM317T	Voltage Reg., TO-220 (TAB) Package
U 10	3-00141-329	LM337T	Voltage Reg., TO-220 (TAB) Package
U 11	3-00114-329	7815	Voltage Reg., TO-220 (TAB) Package
U 12	3-00120-329	7915	Voltage Reg., TO-220 (TAB) Package
Z 0	0-00089-033	4"	Tie
Z 0	0-00186-021	6-32X1-3/8PP	Screw, Panhead Phillips
Z 0	0-00187-021	4-40X1/4PP	Screw, Panhead Phillips
Z 0	0-00231-043	1-32, #4 SHOULD	Washer, nylon
Z 0	0-00246-043	#8 X 1/16	Washer, nylon
Z 0	0-00309-021	8-32X1/4PP	Screw, Panhead Phillips
Z 0	0-00316-003	PLTFM-28	Insulators
Z 0	1-00087-131	2 PIN JUMPER	Connector, Female
Z 0	7-00285-721	PLTFM-21	Machined Part
Z 1	0-00158-070	60MM 24V	Fans, & Hardware

DSP Logic Board Parts List

REF.	SRS PART#	VALUE	DESCRIPTION
C 301	5-00134-529	100P	Cap, Monolythic Ceramic, 50V, 20%, Z5U
C 302	5-00023-529	.1U	Cap, Monolythic Ceramic, 50V, 20%, Z5U
C 303	5-00023-529	.1U	Cap, Monolythic Ceramic, 50V, 20%, Z5U
C 304	5-00127-524	2.2U	Capacitor, Tantalum, 50V, 20%, Rad
C 305	5-00127-524	2.2U	Capacitor, Tantalum, 50V, 20%, Rad
C 306	5-00134-529	100P	Cap, Monolythic Ceramic, 50V, 20%, Z5U
C 501	5-00100-517	2.2U	Capacitor, Tantalum, 35V, 20%, Rad
C 502	5-00100-517	2.2U	Capacitor, Tantalum, 35V, 20%, Rad
C 505	5-00148-545	1000P	Capacitor, Monolythic Ceramic, COG, 1%
C 506	5-00148-545	1000P	Capacitor, Monolythic Ceramic, COG, 1%
C 507	5-00148-545	1000P	Capacitor, Monolythic Ceramic, COG, 1%
C 508	5-00148-545	1000P	Capacitor, Monolythic Ceramic, COG, 1%
C 509	5-00148-545	1000P	Capacitor, Monolythic Ceramic, COG, 1%
C 510	5-00148-545	1000P	Capacitor, Monolythic Ceramic, COG, 1%
C 513	5-00148-545	1000P	Capacitor, Monolythic Ceramic, COG, 1%
C 514	5-00003-501	10P	Capacitor, Ceramic Disc, 50V, 10%, SL
C 515	5-00134-529	100P	Cap, Monolythic Ceramic, 50V, 20%, Z5U
C 516	5-00023-529	.1U	Cap, Monolythic Ceramic, 50V, 20%, Z5U
C 517	5-00023-529	.1U	Cap, Monolythic Ceramic, 50V, 20%, Z5U
C 518	5-00023-529	.1U	Cap, Monolythic Ceramic, 50V, 20%, Z5U
C 519	5-00023-529	.1U	Cap, Monolythic Ceramic, 50V, 20%, Z5U
C 520	5-00023-529	.1U	Cap, Monolythic Ceramic, 50V, 20%, Z5U
C 521	5-00023-529	.1U	Cap, Monolythic Ceramic, 50V, 20%, Z5U
C 522	5-00023-529	.1U	Cap, Monolythic Ceramic, 50V, 20%, Z5U
C 523	5-00023-529	.1U	Cap, Monolythic Ceramic, 50V, 20%, Z5U
C 524	5-00023-529	.1U	Cap, Monolythic Ceramic, 50V, 20%, Z5U
C 525	5-00023-529	.1U	Cap, Monolythic Ceramic, 50V, 20%, Z5U
C 526	5-00023-529	.1U	Cap, Monolythic Ceramic, 50V, 20%, Z5U
C 527	5-00023-529	.1U	Cap, Monolythic Ceramic, 50V, 20%, Z5U
C 528	5-00100-517	2.2U	Capacitor, Tantalum, 35V, 20%, Rad
C 529	5-00100-517	2.2U	Capacitor, Tantalum, 35V, 20%, Rad
C 530	5-00100-517	2.2U	Capacitor, Tantalum, 35V, 20%, Rad
C 531	5-00100-517	2.2U	Capacitor, Tantalum, 35V, 20%, Rad
C 532	5-00127-524	2.2U	Capacitor, Tantalum, 50V, 20%, Rad
C 533	5-00134-529	100P	Cap, Monolythic Ceramic, 50V, 20%, Z5U
C 534	5-00127-524	2.2U	Capacitor, Tantalum, 50V, 20%, Rad
C 540	5-00134-529	100P	Cap, Monolythic Ceramic, 50V, 20%, Z5U
C 541	5-00219-529	.01U	Cap, Monolythic Ceramic, 50V, 20%, Z5U
C 542	5-00134-529	100P	Cap, Monolythic Ceramic, 50V, 20%, Z5U
C 543	5-00003-501	10P	Capacitor, Ceramic Disc, 50V, 10%, SL
C 601	5-00127-524	2.2U	Capacitor, Tantalum, 50V, 20%, Rad
C 602	5-00127-524	2.2U	Capacitor, Tantalum, 50V, 20%, Rad
C 603	5-00127-524	2.2U	Capacitor, Tantalum, 50V, 20%, Rad
C 604	5-00127-524	2.2U	Capacitor, Tantalum, 50V, 20%, Rad
C 605	5-00035-521	47U	Capacitor, Electrolytic, 25V, 20%, Rad
C 606	5-00035-521	47U	Capacitor, Electrolytic, 25V, 20%, Rad
C 607	5-00023-529	.1U	Cap, Monolythic Ceramic, 50V, 20%, Z5U
C 608	5-00023-529	.1U	Cap, Monolythic Ceramic, 50V, 20%, Z5U
C 609	5-00023-529	.1U	Cap, Monolythic Ceramic, 50V, 20%, Z5U

REF.	SRS PART#	VALUE	DESCRIPTION
C 610	5-00023-529	.1U	Cap, Monolythic Ceramic, 50V, 20%, Z5U
C 611	5-00127-524	2.2U	Capacitor, Tantalum, 50V, 20%, Rad
C 612	5-00219-529	.01U	Cap, Monolythic Ceramic, 50V, 20%, Z5U
C 613	5-00100-517	2.2U	Capacitor, Tantalum, 35V, 20%, Rad
C 614	5-00219-529	.01U	Cap, Monolythic Ceramic, 50V, 20%, Z5U
C 615	5-00127-524	2.2U	Capacitor, Tantalum, 50V, 20%, Rad
C 616	5-00219-529	.01U	Cap, Monolythic Ceramic, 50V, 20%, Z5U
C 630	5-00225-548	.1U AXIAL	Capacitor, Ceramic, 50V,+80/-20% Z5U AX
C 631	5-00225-548	.1U AXIAL	Capacitor, Ceramic, 50V,+80/-20% Z5U AX
C 632	5-00225-548	.1U AXIAL	Capacitor, Ceramic, 50V,+80/-20% Z5U AX
C 633	5-00225-548	.1U AXIAL	Capacitor, Ceramic, 50V,+80/-20% Z5U AX
C 634	5-00225-548	.1U AXIAL	Capacitor, Ceramic, 50V,+80/-20% Z5U AX
C 635	5-00225-548	.1U AXIAL	Capacitor, Ceramic, 50V,+80/-20% Z5U AX
C 636	5-00225-548	.1U AXIAL	Capacitor, Ceramic, 50V,+80/-20% Z5U AX
C 637	5-00225-548	.1U AXIAL	Capacitor, Ceramic, 50V,+80/-20% Z5U AX
C 638	5-00225-548	.1U AXIAL	Capacitor, Ceramic, 50V,+80/-20% Z5U AX
C 639	5-00225-548	.1U AXIAL	Capacitor, Ceramic, 50V,+80/-20% Z5U AX
C 640	5-00225-548	.1U AXIAL	Capacitor, Ceramic, 50V,+80/-20% Z5U AX
C 641	5-00225-548	.1U AXIAL	Capacitor, Ceramic, 50V,+80/-20% Z5U AX
C 642	5-00225-548	.1U AXIAL	Capacitor, Ceramic, 50V,+80/-20% Z5U AX
C 643	5-00225-548	.1U AXIAL	Capacitor, Ceramic, 50V,+80/-20% Z5U AX
C 644	5-00225-548	.1U AXIAL	Capacitor, Ceramic, 50V,+80/-20% Z5U AX
C 645	5-00225-548	.1U AXIAL	Capacitor, Ceramic, 50V,+80/-20% Z5U AX
C 646	5-00225-548	.1U AXIAL	Capacitor, Ceramic, 50V,+80/-20% Z5U AX
C 647	5-00225-548	.1U AXIAL	Capacitor, Ceramic, 50V,+80/-20% Z5U AX
C 648	5-00225-548	.1U AXIAL	Capacitor, Ceramic, 50V,+80/-20% Z5U AX
C 649	5-00225-548	.1U AXIAL	Capacitor, Ceramic, 50V,+80/-20% Z5U AX
C 650	5-00225-548	.1U AXIAL	Capacitor, Ceramic, 50V,+80/-20% Z5U AX
C 651	5-00225-548	.1U AXIAL	Capacitor, Ceramic, 50V,+80/-20% Z5U AX
C 652	5-00225-548	.1U AXIAL	Capacitor, Ceramic, 50V,+80/-20% Z5U AX
C 653	5-00225-548	.1U AXIAL	Capacitor, Ceramic, 50V,+80/-20% Z5U AX
C 654	5-00225-548	.1U AXIAL	Capacitor, Ceramic, 50V,+80/-20% Z5U AX
C 656	5-00034-526	100U	Capacitor, Electrolytic, 35V, 20%, Rad
C 657	5-00225-548	.1U AXIAL	Capacitor, Ceramic, 50V,+80/-20% Z5U AX
C 658	5-00225-548	.1U AXIAL	Capacitor, Ceramic, 50V,+80/-20% Z5U AX
C 659	5-00225-548	.1U AXIAL	Capacitor, Ceramic, 50V,+80/-20% Z5U AX
C 661	5-00225-548	.1U AXIAL	Capacitor, Ceramic, 50V,+80/-20% Z5U AX
C 662	5-00225-548	.1U AXIAL	Capacitor, Ceramic, 50V,+80/-20% Z5U AX
C 663	5-00225-548	.1U AXIAL	Capacitor, Ceramic, 50V,+80/-20% Z5U AX
C 668	5-00225-548	.1U AXIAL	Capacitor, Ceramic, 50V,+80/-20% Z5U AX
C 669	5-00225-548	.1U AXIAL	Capacitor, Ceramic, 50V,+80/-20% Z5U AX
C 670	5-00225-548	.1U AXIAL	Capacitor, Ceramic, 50V,+80/-20% Z5U AX
C 671	5-00225-548	.1U AXIAL	Capacitor, Ceramic, 50V,+80/-20% Z5U AX
C 672	5-00225-548	.1U AXIAL	Capacitor, Ceramic, 50V,+80/-20% Z5U AX
C 673	5-00225-548	.1U AXIAL	Capacitor, Ceramic, 50V,+80/-20% Z5U AX
C 675	5-00225-548	.1U AXIAL	Capacitor, Ceramic, 50V,+80/-20% Z5U AX
D 301	3-00004-301	1N4148	Diode
D 302	3-00004-301	1N4148	Diode
J 301	0-00388-000	RCA PHONO	Hardware, Misc.
J 501	0-00388-000	RCA PHONO	Hardware, Misc.
K 301	3-00196-335	HS-212S-5	Relay

PARTS LIST

REF.	SRS PART#	VALUE	DESCRIPTION
K 302	3-00196-335	HS-212S-5	Relay
N 301	4-00284-421	1.0KX4	Res. Network, SIP, 1/4W,2% (Isolated)
N 501	4-00262-425	100X7	Resistor Network SIP 1/4W 2% (Common)
N 502	4-00262-425	100X7	Resistor Network SIP 1/4W 2% (Common)
N 601	4-00468-420	300X8	Resistor Network, DIP, 1/4W,2%,8 Ind
N 602	4-00255-421	100X3	Res. Network, SIP, 1/4W,2% (Isolated)
N 603	4-00255-421	100X3	Res. Network, SIP, 1/4W,2% (Isolated)
PC1	7-00351-701	FFT DIGITAL	Printed Circuit Board
Q 301	3-00022-325	2N3906	Transistor, TO-92 Package
Q 302	3-00022-325	2N3906	Transistor, TO-92 Package
R 101	4-00079-401	4.7K	Resistor, Carbon Film, 1/4W, 5%
R 201	4-00079-401	4.7K	Resistor, Carbon Film, 1/4W, 5%
R 301	4-00034-401	10K	Resistor, Carbon Film, 1/4W, 5%
R 302	4-00034-401	10K	Resistor, Carbon Film, 1/4W, 5%
R 303	4-00034-401	10K	Resistor, Carbon Film, 1/4W, 5%
R 304	4-00142-407	100K	Resistor, Metal Film, 1/8W, 1%, 50PPM
R 305	4-00034-401	10K	Resistor, Carbon Film, 1/4W, 5%
R 306	4-00030-401	10	Resistor, Carbon Film, 1/4W, 5%
R 307	4-00030-401	10	Resistor, Carbon Film, 1/4W, 5%
R 501	4-00772-402	33	Resistor, Carbon Comp, 1/2W, 5%
R 502	4-00772-402	33	Resistor, Carbon Comp, 1/2W, 5%
R 503	4-00177-407	3.48K	Resistor, Metal Film, 1/8W, 1%, 50PPM
R 504	4-00771-407	66.5	Resistor, Metal Film, 1/8W, 1%, 50PPM
R 505	4-00163-407	2.80K	Resistor, Metal Film, 1/8W, 1%, 50PPM
R 506	4-00409-408	1.210K	Resistor, Metal Film, 1/8W, 0.1%, 25ppm
R 507	4-00409-408	1.210K	Resistor, Metal Film, 1/8W, 0.1%, 25ppm
R 508	4-00467-407	2.43K	Resistor, Metal Film, 1/8W, 1%, 50PPM
R 509	4-00193-407	499	Resistor, Metal Film, 1/8W, 1%, 50PPM
R 510	4-00158-407	2.00K	Resistor, Metal Film, 1/8W, 1%, 50PPM
R 511	4-00409-408	1.210K	Resistor, Metal Film, 1/8W, 0.1%, 25ppm
R 512	4-00409-408	1.210K	Resistor, Metal Film, 1/8W, 0.1%, 25ppm
R 513	4-00746-407	2.05K	Resistor, Metal Film, 1/8W, 1%, 50PPM
R 514	4-00317-407	422	Resistor, Metal Film, 1/8W, 1%, 50PPM
R 515	4-00652-407	1.58K	Resistor, Metal Film, 1/8W, 1%, 50PPM
R 516	4-00409-408	1.210K	Resistor, Metal Film, 1/8W, 0.1%, 25ppm
R 517	4-00409-408	1.210K	Resistor, Metal Film, 1/8W, 0.1%, 25ppm
R 518	4-00523-407	649	Resistor, Metal Film, 1/8W, 1%, 50PPM
R 519	4-00177-407	3.48K	Resistor, Metal Film, 1/8W, 1%, 50PPM
R 524	4-00136-407	1.82K	Resistor, Metal Film, 1/8W, 1%, 50PPM
R 525	4-00048-401	2.2K	Resistor, Carbon Film, 1/4W, 5%
R 526	4-00188-407	4.99K	Resistor, Metal Film, 1/8W, 1%, 50PPM
R 527	4-00161-407	2.49K	Resistor, Metal Film, 1/8W, 1%, 50PPM
R 528	4-00188-407	4.99K	Resistor, Metal Film, 1/8W, 1%, 50PPM
R 530	4-00654-407	182	Resistor, Metal Film, 1/8W, 1%, 50PPM
R 531	4-00356-407	20	Resistor, Metal Film, 1/8W, 1%, 50PPM
R 532	4-00031-401	100	Resistor, Carbon Film, 1/4W, 5%
R 542	4-00057-401	220	Resistor, Carbon Film, 1/4W, 5%
R 543	4-00782-448	54.9	Resistor, Metal Film, 1W, 1%,
R 602	4-00080-401	47	Resistor, Carbon Film, 1/4W, 5%
R 603	4-00080-401	47	Resistor, Carbon Film, 1/4W, 5%
R 610	4-00086-401	51	Resistor, Carbon Film, 1/4W, 5%

REF.	SRS PART#	VALUE	DESCRIPTION
R 611	4-00086-401	51	Resistor, Carbon Film, 1/4W, 5%
SO501	1-00108-150	PLCC 68 TH	Socket, THRU-HOLE
SO504	1-00026-150	28 PIN 600 MIL	Socket, THRU-HOLE
T 301	6-00009-610	T1-1-X65	Transformer
T 501	6-00137-601	15MH	Inductor
TP301	1-00143-101	TEST JACK	Vertical Test Jack
TP302	1-00143-101	TEST JACK	Vertical Test Jack
TP502	1-00143-101	TEST JACK	Vertical Test Jack
TP503	1-00143-101	TEST JACK	Vertical Test Jack
TP505	1-00143-101	TEST JACK	Vertical Test Jack
TP601	1-00143-101	TEST JACK	Vertical Test Jack
TP602	1-00143-101	TEST JACK	Vertical Test Jack
U 101	3-00448-360	DSP56001-FE27	Integrated Circuit (Surface Mount Pkg)
U 102	3-00366-341	32KX8-35	STATIC RAM, I.C.
U 103	3-00366-341	32KX8-35	STATIC RAM, I.C.
U 104	3-00366-341	32KX8-35	STATIC RAM, I.C.
U 105	3-00049-340	74HC74	Integrated Circuit (Thru-hole Pkg)
U 106	3-00476-343	U106 QCHECK	GAL/PAL, I.C.
U 108	3-00155-340	74HC04	Integrated Circuit (Thru-hole Pkg)
U 201	3-00448-360	DSP56001-FE27	Integrated Circuit (Surface Mount Pkg)
U 202	3-00366-341	32KX8-35	STATIC RAM, I.C.
U 203	3-00366-341	32KX8-35	STATIC RAM, I.C.
U 204	3-00366-341	32KX8-35	STATIC RAM, I.C.
U 207	3-00472-343	U207 DSP2DEC	GAL/PAL, I.C.
U 301	3-00461-340	OPA2604	Integrated Circuit (Thru-hole Pkg)
U 302	3-00364-340	74F86	Integrated Circuit (Thru-hole Pkg)
U 303	3-00211-340	LT1016	Integrated Circuit (Thru-hole Pkg)
U 304	3-00238-340	74F74	Integrated Circuit (Thru-hole Pkg)
U 305	3-00238-340	74F74	Integrated Circuit (Thru-hole Pkg)
U 306	3-00238-340	74F74	Integrated Circuit (Thru-hole Pkg)
U 501	3-00533-340	ADSP2105	Integrated Circuit (Thru-hole Pkg)
U 502	3-00366-341	32KX8-35	STATIC RAM, I.C.
U 503	3-00366-341	32KX8-35	STATIC RAM, I.C.
U 506	3-00531-340	AD766JN	Integrated Circuit (Thru-hole Pkg)
U 507	3-00532-340	AD744	Integrated Circuit (Thru-hole Pkg)
U 508	3-00130-340	5532A	Integrated Circuit (Thru-hole Pkg)
U 509	3-00130-340	5532A	Integrated Circuit (Thru-hole Pkg)
U 510	3-00130-340	5532A	Integrated Circuit (Thru-hole Pkg)
U 511	3-00423-340	5534	Integrated Circuit (Thru-hole Pkg)
U 512	3-00130-340	5532A	Integrated Circuit (Thru-hole Pkg)
U 513	3-01017-340	TLC7528CN	Integrated Circuit (Thru-hole Pkg)
U 514	3-00383-340	LM6321	Integrated Circuit (Thru-hole Pkg)
U 515	3-00091-340	LF412	Integrated Circuit (Thru-hole Pkg)
U 516	3-00116-325	78L05	Transistor, TO-92 Package
U 517	3-00454-340	74HC574	Integrated Circuit (Thru-hole Pkg)
U 518	3-00440-340	74HC573	Integrated Circuit (Thru-hole Pkg)
U 519	3-00045-340	74HC32	Integrated Circuit (Thru-hole Pkg)
U 520	3-00371-340	DG444	Integrated Circuit (Thru-hole Pkg)
U 521	3-00467-340	74HCT74	Integrated Circuit (Thru-hole Pkg)
U 601	3-00440-340	74HC573	Integrated Circuit (Thru-hole Pkg)
U 602	3-00387-340	74HC245	Integrated Circuit (Thru-hole Pkg)

REF.	SRS PART#	VALUE	DESCRIPTION
U 603	3-00454-340	74HC574	Integrated Circuit (Thru-hole Pkg)
U 604	3-00454-340	74HC574	Integrated Circuit (Thru-hole Pkg)
U 605	3-00475-343	U605 PLTDECOD	GAL/PAL, I.C.
U 606	6-00110-621	30.208 MHZ	Crystal Oscillator
U 607	3-00364-340	74F86	Integrated Circuit (Thru-hole Pkg)
U 608	3-00473-343	U608 COUNT118	GAL/PAL, I.C.
U 609	3-00474-343	U609 A /ADCONTR	GAL/PAL, I.C.
U 610	3-00463-340	74F574	Integrated Circuit (Thru-hole Pkg)
U 611	3-00117-325	78L12	Transistor, TO-92 Package
U 612	3-00123-325	79L12	Transistor, TO-92 Package
U 613	3-00190-340	10MHZ 25PPM	Integrated Circuit (Thru-hole Pkg)
U 614	6-00121-621	27.000 MHZ	Crystal Oscillator
Z 0	0-00373-000	CARD EJECTOR	Hardware, Misc.

Analog Input Board Parts List

REF.	SRS PART#	VALUE	DESCRIPTION
C 101	5-00060-512	1.0U	Cap, Stacked Metal Film 50V 5% -40/+85c
C 102	5-00060-512	1.0U	Cap, Stacked Metal Film 50V 5% -40/+85c
C 103	5-00023-529	.1U	Cap, Monolythic Ceramic, 50V, 20%, Z5U
C 104	5-00100-517	2.2U	Capacitor, Tantalum, 35V, 20%, Rad
C 105	5-00023-529	.1U	Cap, Monolythic Ceramic, 50V, 20%, Z5U
C 106	5-00159-501	6.8P	Capacitor, Ceramic Disc, 50V, 10%, SL
C 107	5-00023-529	.1U	Cap, Monolythic Ceramic, 50V, 20%, Z5U
C 108	5-00100-517	2.2U	Capacitor, Tantalum, 35V, 20%, Rad
C 109	5-00100-517	2.2U	Capacitor, Tantalum, 35V, 20%, Rad
C 110	5-00100-517	2.2U	Capacitor, Tantalum, 35V, 20%, Rad
C 111	5-00100-517	2.2U	Capacitor, Tantalum, 35V, 20%, Rad
C 112	5-00100-517	2.2U	Capacitor, Tantalum, 35V, 20%, Rad
C 113	5-00100-517	2.2U	Capacitor, Tantalum, 35V, 20%, Rad
C 118	5-00225-548	.1U AXIAL	Capacitor, Ceramic, 50V,+80/-20% Z5U AX
C 202	5-00023-529	.1U	Cap, Monolythic Ceramic, 50V, 20%, Z5U
C 250	5-00023-529	.1U	Cap, Monolythic Ceramic, 50V, 20%, Z5U
C 251	5-00023-529	.1U	Cap, Monolythic Ceramic, 50V, 20%, Z5U
C 252	5-00023-529	.1U	Cap, Monolythic Ceramic, 50V, 20%, Z5U
C 253	5-00023-529	.1U	Cap, Monolythic Ceramic, 50V, 20%, Z5U
C 256	5-00023-529	.1U	Cap, Monolythic Ceramic, 50V, 20%, Z5U
C 259	5-00023-529	.1U	Cap, Monolythic Ceramic, 50V, 20%, Z5U
C 260	5-00023-529	.1U	Cap, Monolythic Ceramic, 50V, 20%, Z5U
C 261	5-00023-529	.1U	Cap, Monolythic Ceramic, 50V, 20%, Z5U
C 262	5-00023-529	.1U	Cap, Monolythic Ceramic, 50V, 20%, Z5U
C 263	5-00023-529	.1U	Cap, Monolythic Ceramic, 50V, 20%, Z5U
C 264	5-00023-529	.1U	Cap, Monolythic Ceramic, 50V, 20%, Z5U
C 265	5-00100-517	2.2U	Capacitor, Tantalum, 35V, 20%, Rad
C 266	5-00100-517	2.2U	Capacitor, Tantalum, 35V, 20%, Rad
C 268	5-00100-517	2.2U	Capacitor, Tantalum, 35V, 20%, Rad
C 269	5-00100-517	2.2U	Capacitor, Tantalum, 35V, 20%, Rad
C 270	5-00100-517	2.2U	Capacitor, Tantalum, 35V, 20%, Rad
C 271	5-00100-517	2.2U	Capacitor, Tantalum, 35V, 20%, Rad
C 272	5-00100-517	2.2U	Capacitor, Tantalum, 35V, 20%, Rad
C 273	5-00100-517	2.2U	Capacitor, Tantalum, 35V, 20%, Rad

REF.	SRS PART#	VALUE	DESCRIPTION
C 274	5-00197-501	18P	Capacitor, Ceramic Disc, 50V, 10%, SL
C 301	5-00148-545	1000P	Capacitor, Monolythic Ceramic, COG, 1%
C 302	5-00148-545	1000P	Capacitor, Monolythic Ceramic, COG, 1%
C 303	5-00148-545	1000P	Capacitor, Monolythic Ceramic, COG, 1%
C 304	5-00148-545	1000P	Capacitor, Monolythic Ceramic, COG, 1%
C 305	5-00148-545	1000P	Capacitor, Monolythic Ceramic, COG, 1%
C 306	5-00148-545	1000P	Capacitor, Monolythic Ceramic, COG, 1%
C 307	5-00148-545	1000P	Capacitor, Monolythic Ceramic, COG, 1%
C 308	5-00148-545	1000P	Capacitor, Monolythic Ceramic, COG, 1%
C 309	5-00148-545	1000P	Capacitor, Monolythic Ceramic, COG, 1%
C 310	5-00100-517	2.2U	Capacitor, Tantalum, 35V, 20%, Rad
C 311	5-00002-501	100P	Capacitor, Ceramic Disc, 50V, 10%, SL
C 350	5-00100-517	2.2U	Capacitor, Tantalum, 35V, 20%, Rad
C 351	5-00100-517	2.2U	Capacitor, Tantalum, 35V, 20%, Rad
C 352	5-00100-517	2.2U	Capacitor, Tantalum, 35V, 20%, Rad
C 353	5-00100-517	2.2U	Capacitor, Tantalum, 35V, 20%, Rad
C 354	5-00100-517	2.2U	Capacitor, Tantalum, 35V, 20%, Rad
C 355	5-00100-517	2.2U	Capacitor, Tantalum, 35V, 20%, Rad
C 356	5-00100-517	2.2U	Capacitor, Tantalum, 35V, 20%, Rad
C 357	5-00100-517	2.2U	Capacitor, Tantalum, 35V, 20%, Rad
C 358	5-00023-529	.1U	Cap, Monolythic Ceramic, 50V, 20%, Z5U
C 359	5-00023-529	.1U	Cap, Monolythic Ceramic, 50V, 20%, Z5U
C 360	5-00100-517	2.2U	Capacitor, Tantalum, 35V, 20%, Rad
C 361	5-00100-517	2.2U	Capacitor, Tantalum, 35V, 20%, Rad
C 363	5-00023-529	.1U	Cap, Monolythic Ceramic, 50V, 20%, Z5U
C 364	5-00023-529	.1U	Cap, Monolythic Ceramic, 50V, 20%, Z5U
C 365	5-00023-529	.1U	Cap, Monolythic Ceramic, 50V, 20%, Z5U
C 401	5-00023-529	.1U	Cap, Monolythic Ceramic, 50V, 20%, Z5U
C 402	5-00219-529	.01U	Cap, Monolythic Ceramic, 50V, 20%, Z5U
C 403	5-00100-517	2.2U	Capacitor, Tantalum, 35V, 20%, Rad
C 404	5-00219-529	.01U	Cap, Monolythic Ceramic, 50V, 20%, Z5U
C 405	5-00100-517	2.2U	Capacitor, Tantalum, 35V, 20%, Rad
C 406	5-00219-529	.01U	Cap, Monolythic Ceramic, 50V, 20%, Z5U
C 407	5-00100-517	2.2U	Capacitor, Tantalum, 35V, 20%, Rad
C 408	5-00219-529	.01U	Cap, Monolythic Ceramic, 50V, 20%, Z5U
C 409	5-00100-517	2.2U	Capacitor, Tantalum, 35V, 20%, Rad
C 410	5-00219-529	.01U	Cap, Monolythic Ceramic, 50V, 20%, Z5U
C 411	5-00219-529	.01U	Cap, Monolythic Ceramic, 50V, 20%, Z5U
C 412	5-00100-517	2.2U	Capacitor, Tantalum, 35V, 20%, Rad
C 413	5-00219-529	.01U	Cap, Monolythic Ceramic, 50V, 20%, Z5U
C 414	5-00219-529	.01U	Cap, Monolythic Ceramic, 50V, 20%, Z5U
C 415	5-00100-517	2.2U	Capacitor, Tantalum, 35V, 20%, Rad
C 416	5-00219-529	.01U	Cap, Monolythic Ceramic, 50V, 20%, Z5U
C 417	5-00100-517	2.2U	Capacitor, Tantalum, 35V, 20%, Rad
C 418	5-00219-529	.01U	Cap, Monolythic Ceramic, 50V, 20%, Z5U
C 503	5-00100-517	2.2U	Capacitor, Tantalum, 35V, 20%, Rad
C 509	5-00172-544	1000U	Cap, Mini Electrolytic, 25V, 20%, Radial
C 510	5-00172-544	1000U	Cap, Mini Electrolytic, 25V, 20%, Radial
C 511	5-00023-529	.1U	Cap, Monolythic Ceramic, 50V, 20%, Z5U
C 512	5-00023-529	.1U	Cap, Monolythic Ceramic, 50V, 20%, Z5U
C 513	5-00100-517	2.2U	Capacitor, Tantalum, 35V, 20%, Rad

PARTS LIST

REF.	SRS PART#	VALUE	DESCRIPTION
C 514	5-00100-517	2.2U	Capacitor, Tantalum, 35V, 20%, Rad
C 515	5-00260-544	470U	Cap, Mini Electrolytic, 25V, 20%, Radial
C 516	5-00023-529	.1U	Cap, Monolythic Ceramic, 50V, 20%, Z5U
C 517	5-00260-544	470U	Cap, Mini Electrolytic, 25V, 20%, Radial
C 518	5-00023-529	.1U	Cap, Monolythic Ceramic, 50V, 20%, Z5U
C 519	5-00100-517	2.2U	Capacitor, Tantalum, 35V, 20%, Rad
C 520	5-00100-517	2.2U	Capacitor, Tantalum, 35V, 20%, Rad
C 521	5-00260-544	470U	Cap, Mini Electrolytic, 25V, 20%, Radial
C 522	5-00023-529	.1U	Cap, Monolythic Ceramic, 50V, 20%, Z5U
C 523	5-00260-544	470U	Cap, Mini Electrolytic, 25V, 20%, Radial
C 524	5-00023-529	.1U	Cap, Monolythic Ceramic, 50V, 20%, Z5U
C 525	5-00023-529	.1U	Cap, Monolythic Ceramic, 50V, 20%, Z5U
C 526	5-00023-529	.1U	Cap, Monolythic Ceramic, 50V, 20%, Z5U
C 527	5-00100-517	2.2U	Capacitor, Tantalum, 35V, 20%, Rad
C 528	5-00100-517	2.2U	Capacitor, Tantalum, 35V, 20%, Rad
C 529	5-00100-517	2.2U	Capacitor, Tantalum, 35V, 20%, Rad
C 530	5-00023-529	.1U	Cap, Monolythic Ceramic, 50V, 20%, Z5U
C 531	5-00100-517	2.2U	Capacitor, Tantalum, 35V, 20%, Rad
C 533	5-00023-529	.1U	Cap, Monolythic Ceramic, 50V, 20%, Z5U
C 534	5-00225-548	.1U AXIAL	Capacitor, Ceramic, 50V,+80/-20% Z5U AX
C 535	5-00225-548	.1U AXIAL	Capacitor, Ceramic, 50V,+80/-20% Z5U AX
C 536	5-00225-548	.1U AXIAL	Capacitor, Ceramic, 50V,+80/-20% Z5U AX
C 537	5-00225-548	.1U AXIAL	Capacitor, Ceramic, 50V,+80/-20% Z5U AX
C 538	5-00100-517	2.2U	Capacitor, Tantalum, 35V, 20%, Rad
C 539	5-00100-517	2.2U	Capacitor, Tantalum, 35V, 20%, Rad
D 101	3-00457-301	1N5241B	Diode
D 102	3-00004-301	1N4148	Diode
D 103	3-00004-301	1N4148	Diode
D 104	3-00004-301	1N4148	Diode
D 105	3-00004-301	1N4148	Diode
D 106	3-00004-301	1N4148	Diode
D 107	3-00004-301	1N4148	Diode
D 108	3-00004-301	1N4148	Diode
D 109	3-00004-301	1N4148	Diode
D 110	3-00004-301	1N4148	Diode
D 111	3-00004-301	1N4148	Diode
D 112	3-00004-301	1N4148	Diode
D 301	3-00004-301	1N4148	Diode
D 302	3-00004-301	1N4148	Diode
D 303	3-00293-301	1N5226B	Diode
D 304	3-00293-301	1N5226B	Diode
J 101	0-00388-000	RCA PHONO	Hardware, Misc.
J 102	0-00388-000	RCA PHONO	Hardware, Misc.
JP401	0-00772-000	1.5" WIRE	Hardware, Misc.
JP402	0-00772-000	1.5" WIRE	Hardware, Misc.
JP503	0-00772-000	1.5" WIRE	Hardware, Misc.
K 101	3-00239-335	HS-212-12	Relay
K 102	3-00239-335	HS-212-12	Relay
K 103	3-00239-335	HS-212-12	Relay
K 104	3-00239-335	HS-212-12	Relay
K 105	3-00239-335	HS-212-12	Relay

REF.	SRS PART#	VALUE	DESCRIPTION
K 106	3-00240-335	BS-211-DC12 GF	Relay
K 107	3-00240-335	BS-211-DC12 GF	Relay
L 501	6-00055-630	FB43-1801	Ferrite Beads
N 501	4-00265-421	100X4	Res. Network, SIP, 1/4W,2% (Isolated)
N 502	4-00265-421	100X4	Res. Network, SIP, 1/4W,2% (Isolated)
N 503	4-00468-420	300X8	Resistor Network, DIP, 1/4W,2%,8 Ind
P 101	4-00354-445	20	Pot, Multi-Turn, Side Adjust
P 102	4-00231-445	50K	Pot, Multi-Turn, Side Adjust
P 103	4-00730-445	100	Pot, Multi-Turn, Side Adjust
P 104	4-00015-445	100K	Pot, Multi-Turn, Side Adjust
P 301	4-00016-445	10K	Pot, Multi-Turn, Side Adjust
PC1	7-00352-701	FFT ANALOG	Printed Circuit Board
Q 101	3-00021-325	2N3904	Transistor, TO-92 Package
Q 102	3-00021-325	2N3904	Transistor, TO-92 Package
Q 103	3-00021-325	2N3904	Transistor, TO-92 Package
Q 104	3-00021-325	2N3904	Transistor, TO-92 Package
Q 105	3-00021-325	2N3904	Transistor, TO-92 Package
Q 106	3-00021-325	2N3904	Transistor, TO-92 Package
Q 107	3-00021-325	2N3904	Transistor, TO-92 Package
Q 501	3-00021-325	2N3904	Transistor, TO-92 Package
R 101	4-00616-453	49.9	Resistor, 2W, 1%
R 102	4-00593-408	965.0K	Resistor, Metal Film, 1/8W, 0.1%, 25ppm
R 103	4-00259-408	31.60K	Resistor, Metal Film, 1/8W, 0.1%, 25ppm
R 104	4-00593-408	965.0K	Resistor, Metal Film, 1/8W, 0.1%, 25ppm
R 105	4-00259-408	31.60K	Resistor, Metal Film, 1/8W, 0.1%, 25ppm
R 106	4-00203-407	75.0K	Resistor, Metal Film, 1/8W, 1%, 50PPM
R 107	4-00580-407	475	Resistor, Metal Film, 1/8W, 1%, 50PPM
R 108	4-00580-407	475	Resistor, Metal Film, 1/8W, 1%, 50PPM
R 109	4-00544-407	165	Resistor, Metal Film, 1/8W, 1%, 50PPM
R 110	4-00528-408	499	Resistor, Metal Film, 1/8W, 0.1%, 25ppm
R 111	4-00528-408	499	Resistor, Metal Film, 1/8W, 0.1%, 25ppm
R 112	4-00203-407	75.0K	Resistor, Metal Film, 1/8W, 1%, 50PPM
R 113	4-00138-407	10.0K	Resistor, Metal Film, 1/8W, 1%, 50PPM
R 114	4-00652-407	1.58K	Resistor, Metal Film, 1/8W, 1%, 50PPM
R 115	4-00652-407	1.58K	Resistor, Metal Film, 1/8W, 1%, 50PPM
R 116	4-00138-407	10.0K	Resistor, Metal Film, 1/8W, 1%, 50PPM
R 117	4-00217-408	1.000K	Resistor, Metal Film, 1/8W, 0.1%, 25ppm
R 118	4-00301-408	110	Resistor, Metal Film, 1/8W, 0.1%, 25ppm
R 119	4-00142-407	100K	Resistor, Metal Film, 1/8W, 1%, 50PPM
R 120	4-00138-407	10.0K	Resistor, Metal Film, 1/8W, 1%, 50PPM
R 121	4-00652-407	1.58K	Resistor, Metal Film, 1/8W, 1%, 50PPM
R 122	4-00652-407	1.58K	Resistor, Metal Film, 1/8W, 1%, 50PPM
R 123	4-00138-407	10.0K	Resistor, Metal Film, 1/8W, 1%, 50PPM
R 124	4-00217-408	1.000K	Resistor, Metal Film, 1/8W, 0.1%, 25ppm
R 125	4-00234-407	10	Resistor, Metal Film, 1/8W, 1%, 50PPM
R 126	4-00301-408	110	Resistor, Metal Film, 1/8W, 0.1%, 25ppm
R 127	4-00142-407	100K	Resistor, Metal Film, 1/8W, 1%, 50PPM
R 128	4-00142-407	100K	Resistor, Metal Film, 1/8W, 1%, 50PPM
R 129	4-00234-407	10	Resistor, Metal Film, 1/8W, 1%, 50PPM
R 130	4-00021-401	1.0K	Resistor, Carbon Film, 1/4W, 5%
R 131	4-00192-407	49.9K	Resistor, Metal Film, 1/8W, 1%, 50PPM

PARTS LIST

REF.	SRS PART#	VALUE	DESCRIPTION
R 132	4-00034-401	10K	Resistor, Carbon Film, 1/4W, 5%
R 133	4-00030-401	10	Resistor, Carbon Film, 1/4W, 5%
R 134	4-00030-401	10	Resistor, Carbon Film, 1/4W, 5%
R 135	4-00030-401	10	Resistor, Carbon Film, 1/4W, 5%
R 136	4-00030-401	10	Resistor, Carbon Film, 1/4W, 5%
R 137	4-00142-407	100K	Resistor, Metal Film, 1/8W, 1%, 50PPM
R 138	4-00619-408	909	Resistor, Metal Film, 1/8W, 0.1%, 25ppm
R 139	4-00619-408	909	Resistor, Metal Film, 1/8W, 0.1%, 25ppm
R 140	4-00234-407	10	Resistor, Metal Film, 1/8W, 1%, 50PPM
R 141	4-00138-407	10.0K	Resistor, Metal Film, 1/8W, 1%, 50PPM
R 142	4-00411-407	1.37K	Resistor, Metal Film, 1/8W, 1%, 50PPM
R 143	4-00411-407	1.37K	Resistor, Metal Film, 1/8W, 1%, 50PPM
R 144	4-00138-407	10.0K	Resistor, Metal Film, 1/8W, 1%, 50PPM
R 146	4-00722-401	43K	Resistor, Carbon Film, 1/4W, 5%
R 147	4-00042-401	15K	Resistor, Carbon Film, 1/4W, 5%
R 148	4-00141-407	100	Resistor, Metal Film, 1/8W, 1%, 50PPM
R 149	4-00141-407	100	Resistor, Metal Film, 1/8W, 1%, 50PPM
R 201	4-00196-407	6.04K	Resistor, Metal Film, 1/8W, 1%, 50PPM
R 202	4-00185-407	4.02K	Resistor, Metal Film, 1/8W, 1%, 50PPM
R 203	4-00206-407	8.06K	Resistor, Metal Film, 1/8W, 1%, 50PPM
R 204	4-00130-407	1.00K	Resistor, Metal Film, 1/8W, 1%, 50PPM
R 205	4-00130-407	1.00K	Resistor, Metal Film, 1/8W, 1%, 50PPM
R 206	4-00210-407	9.09K	Resistor, Metal Film, 1/8W, 1%, 50PPM
R 207	4-00130-407	1.00K	Resistor, Metal Film, 1/8W, 1%, 50PPM
R 208	4-00653-407	205	Resistor, Metal Film, 1/8W, 1%, 50PPM
R 209	4-00737-407	162	Resistor, Metal Film, 1/8W, 1%, 50PPM
R 210	4-00661-407	130	Resistor, Metal Film, 1/8W, 1%, 50PPM
R 211	4-00665-407	102	Resistor, Metal Film, 1/8W, 1%, 50PPM
R 212	4-00302-407	82.5	Resistor, Metal Film, 1/8W, 1%, 50PPM
R 213	4-00736-407	64.9	Resistor, Metal Film, 1/8W, 1%, 50PPM
R 214	4-00169-407	249	Resistor, Metal Film, 1/8W, 1%, 50PPM
R 216	4-00138-407	10.0K	Resistor, Metal Film, 1/8W, 1%, 50PPM
R 217	4-00663-407	576	Resistor, Metal Film, 1/8W, 1%, 50PPM
R 218	4-00663-407	576	Resistor, Metal Film, 1/8W, 1%, 50PPM
R 219	4-00138-407	10.0K	Resistor, Metal Film, 1/8W, 1%, 50PPM
R 250	4-00141-407	100	Resistor, Metal Film, 1/8W, 1%, 50PPM
R 251	4-00141-407	100	Resistor, Metal Film, 1/8W, 1%, 50PPM
R 252	4-00141-407	100	Resistor, Metal Film, 1/8W, 1%, 50PPM
R 253	4-00141-407	100	Resistor, Metal Film, 1/8W, 1%, 50PPM
R 256	4-00141-407	100	Resistor, Metal Film, 1/8W, 1%, 50PPM
R 259	4-00141-407	100	Resistor, Metal Film, 1/8W, 1%, 50PPM
R 260	4-00141-407	100	Resistor, Metal Film, 1/8W, 1%, 50PPM
R 261	4-00141-407	100	Resistor, Metal Film, 1/8W, 1%, 50PPM
R 262	4-00141-407	100	Resistor, Metal Film, 1/8W, 1%, 50PPM
R 263	4-00141-407	100	Resistor, Metal Film, 1/8W, 1%, 50PPM
R 264	4-00141-407	100	Resistor, Metal Film, 1/8W, 1%, 50PPM
R 265	4-00030-401	10	Resistor, Carbon Film, 1/4W, 5%
R 266	4-00030-401	10	Resistor, Carbon Film, 1/4W, 5%
R 267	4-00030-401	10	Resistor, Carbon Film, 1/4W, 5%
R 268	4-00030-401	10	Resistor, Carbon Film, 1/4W, 5%
R 269	4-00030-401	10	Resistor, Carbon Film, 1/4W, 5%

REF.	SRS PART#	VALUE	DESCRIPTION
R 270	4-00030-401	10	Resistor, Carbon Film, 1/4W, 5%
R 271	4-00030-401	10	Resistor, Carbon Film, 1/4W, 5%
R 272	4-00030-401	10	Resistor, Carbon Film, 1/4W, 5%
R 301	4-00162-407	2.67K	Resistor, Metal Film, 1/8W, 1%, 50PPM
R 303	4-00745-407	60.4	Resistor, Metal Film, 1/8W, 1%, 50PPM
R 304	4-00417-407	2.74K	Resistor, Metal Film, 1/8W, 1%, 50PPM
R 305	4-00188-407	4.99K	Resistor, Metal Film, 1/8W, 1%, 50PPM
R 306	4-00188-407	4.99K	Resistor, Metal Film, 1/8W, 1%, 50PPM
R 307	4-00475-407	2.61K	Resistor, Metal Film, 1/8W, 1%, 50PPM
R 308	4-00235-407	383	Resistor, Metal Film, 1/8W, 1%, 50PPM
R 309	4-00351-407	2.32K	Resistor, Metal Film, 1/8W, 1%, 50PPM
R 310	4-00188-407	4.99K	Resistor, Metal Film, 1/8W, 1%, 50PPM
R 311	4-00188-407	4.99K	Resistor, Metal Film, 1/8W, 1%, 50PPM
R 312	4-00348-407	2.21K	Resistor, Metal Film, 1/8W, 1%, 50PPM
R 313	4-00414-407	549	Resistor, Metal Film, 1/8W, 1%, 50PPM
R 314	4-00601-407	1.96K	Resistor, Metal Film, 1/8W, 1%, 50PPM
R 315	4-00188-407	4.99K	Resistor, Metal Film, 1/8W, 1%, 50PPM
R 316	4-00188-407	4.99K	Resistor, Metal Film, 1/8W, 1%, 50PPM
R 317	4-00746-407	2.05K	Resistor, Metal Film, 1/8W, 1%, 50PPM
R 318	4-00747-407	324	Resistor, Metal Film, 1/8W, 1%, 50PPM
R 319	4-00700-407	1.62K	Resistor, Metal Film, 1/8W, 1%, 50PPM
R 320	4-00188-407	4.99K	Resistor, Metal Film, 1/8W, 1%, 50PPM
R 321	4-00188-407	4.99K	Resistor, Metal Film, 1/8W, 1%, 50PPM
R 322	4-00655-407	665	Resistor, Metal Film, 1/8W, 1%, 50PPM
R 323	4-00742-407	1.47K	Resistor, Metal Film, 1/8W, 1%, 50PPM
R 324	4-00188-407	4.99K	Resistor, Metal Film, 1/8W, 1%, 50PPM
R 325	4-00130-407	1.00K	Resistor, Metal Film, 1/8W, 1%, 50PPM
R 326	4-00048-401	2.2K	Resistor, Carbon Film, 1/4W, 5%
R 327	4-00164-407	20.0K	Resistor, Metal Film, 1/8W, 1%, 50PPM
R 328	4-00161-407	2.49K	Resistor, Metal Film, 1/8W, 1%, 50PPM
R 329	4-00130-407	1.00K	Resistor, Metal Film, 1/8W, 1%, 50PPM
R 350	4-00030-401	10	Resistor, Carbon Film, 1/4W, 5%
R 351	4-00030-401	10	Resistor, Carbon Film, 1/4W, 5%
R 352	4-00030-401	10	Resistor, Carbon Film, 1/4W, 5%
R 353	4-00030-401	10	Resistor, Carbon Film, 1/4W, 5%
R 354	4-00030-401	10	Resistor, Carbon Film, 1/4W, 5%
R 355	4-00030-401	10	Resistor, Carbon Film, 1/4W, 5%
R 356	4-00030-401	10	Resistor, Carbon Film, 1/4W, 5%
R 357	4-00030-401	10	Resistor, Carbon Film, 1/4W, 5%
R 358	4-00141-407	100	Resistor, Metal Film, 1/8W, 1%, 50PPM
R 359	4-00141-407	100	Resistor, Metal Film, 1/8W, 1%, 50PPM
R 360	4-00030-401	10	Resistor, Carbon Film, 1/4W, 5%
R 361	4-00030-401	10	Resistor, Carbon Film, 1/4W, 5%
R 362	4-00141-407	100	Resistor, Metal Film, 1/8W, 1%, 50PPM
R 363	4-00141-407	100	Resistor, Metal Film, 1/8W, 1%, 50PPM
R 364	4-00141-407	100	Resistor, Metal Film, 1/8W, 1%, 50PPM
R 365	4-00130-407	1.00K	Resistor, Metal Film, 1/8W, 1%, 50PPM
R 366	4-00136-407	1.82K	Resistor, Metal Film, 1/8W, 1%, 50PPM
R 367	4-00111-402	390	Resistor, Carbon Comp, 1/2W, 5%
R 368	4-00111-402	390	Resistor, Carbon Comp, 1/2W, 5%
R 402	4-00041-401	150	Resistor, Carbon Film, 1/4W, 5%

PARTS LIST

REF.	SRS PART#	VALUE	DESCRIPTION
R 403	4-00041-401	150	Resistor, Carbon Film, 1/4W, 5%
R 501	4-00169-407	249	Resistor, Metal Film, 1/8W, 1%, 50PPM
R 502	4-00163-407	2.80K	Resistor, Metal Film, 1/8W, 1%, 50PPM
R 503	4-00163-407	2.80K	Resistor, Metal Film, 1/8W, 1%, 50PPM
R 504	4-00169-407	249	Resistor, Metal Film, 1/8W, 1%, 50PPM
R 505	4-00107-402	10	Resistor, Carbon Comp, 1/2W, 5%
R 506	4-00107-402	10	Resistor, Carbon Comp, 1/2W, 5%
R 507	4-00107-402	10	Resistor, Carbon Comp, 1/2W, 5%
R 508	4-00107-402	10	Resistor, Carbon Comp, 1/2W, 5%
R 509	4-00112-402	47	Resistor, Carbon Comp, 1/2W, 5%
R 510	4-00112-402	47	Resistor, Carbon Comp, 1/2W, 5%
R 511	4-00042-401	15K	Resistor, Carbon Film, 1/4W, 5%
R 512	4-00084-401	5.1K	Resistor, Carbon Film, 1/4W, 5%
SO100	1-00173-150	8 PIN MACH	Socket, THRU-HOLE
SO101	1-00173-150	8 PIN MACH	Socket, THRU-HOLE
T 505	6-00009-610	T1-1-X65	Transformer
TP101	1-00143-101	TEST JACK	Vertical Test Jack
TP102	1-00143-101	TEST JACK	Vertical Test Jack
TP103	1-00143-101	TEST JACK	Vertical Test Jack
TP201	1-00143-101	TEST JACK	Vertical Test Jack
TP202	1-00143-101	TEST JACK	Vertical Test Jack
TP203	1-00143-101	TEST JACK	Vertical Test Jack
TP204	1-00143-101	TEST JACK	Vertical Test Jack
TP205	1-00143-101	TEST JACK	Vertical Test Jack
TP206	1-00143-101	TEST JACK	Vertical Test Jack
TP301	1-00143-101	TEST JACK	Vertical Test Jack
TP302	1-00143-101	TEST JACK	Vertical Test Jack
TP303	1-00143-101	TEST JACK	Vertical Test Jack
TP401	1-00143-101	TEST JACK	Vertical Test Jack
TP402	1-00143-101	TEST JACK	Vertical Test Jack
TP403	1-00143-101	TEST JACK	Vertical Test Jack
TP404	1-00143-101	TEST JACK	Vertical Test Jack
TP405	1-00143-101	TEST JACK	Vertical Test Jack
TP406	1-00143-101	TEST JACK	Vertical Test Jack
TP407	1-00143-101	TEST JACK	Vertical Test Jack
TP408	1-00143-101	TEST JACK	Vertical Test Jack
TP501	1-00143-101	TEST JACK	Vertical Test Jack
TP502	1-00143-101	TEST JACK	Vertical Test Jack
TP503	1-00143-101	TEST JACK	Vertical Test Jack
TP504	1-00143-101	TEST JACK	Vertical Test Jack
TP505	1-00143-101	TEST JACK	Vertical Test Jack
TP506	1-00143-101	TEST JACK	Vertical Test Jack
TP507	1-00143-101	TEST JACK	Vertical Test Jack
TP508	1-00143-101	TEST JACK	Vertical Test Jack
TP511	1-00143-101	TEST JACK	Vertical Test Jack
TP512	1-00143-101	TEST JACK	Vertical Test Jack
TP513	1-00143-101	TEST JACK	Vertical Test Jack
TP514	1-00143-101	TEST JACK	Vertical Test Jack
TP515	1-00143-101	TEST JACK	Vertical Test Jack
TP516	1-00143-101	TEST JACK	Vertical Test Jack
TP517	1-00143-101	TEST JACK	Vertical Test Jack

REF.	SRS PART#	VALUE	DESCRIPTION
TP518	1-00143-101	TEST JACK	Vertical Test Jack
TP519	1-00143-101	TEST JACK	Vertical Test Jack
TP520	1-00143-101	TEST JACK	Vertical Test Jack
TP521	1-00143-101	TEST JACK	Vertical Test Jack
U 100	3-00246-340	NPD5564	Integrated Circuit (Thru-hole Pkg)
U 101	3-00817-340	NPD5566	Integrated Circuit (Thru-hole Pkg)
U 102	3-00382-340	OP37	Integrated Circuit (Thru-hole Pkg)
U 103	3-00471-340	OP27GP	Integrated Circuit (Thru-hole Pkg)
U 104	3-00461-340	OPA2604	Integrated Circuit (Thru-hole Pkg)
U 105	3-00087-340	LF347	Integrated Circuit (Thru-hole Pkg)
U 201	3-00371-340	DG444	Integrated Circuit (Thru-hole Pkg)
U 202	3-00155-340	74HC04	Integrated Circuit (Thru-hole Pkg)
U 203	3-00382-340	OP37	Integrated Circuit (Thru-hole Pkg)
U 204	3-00371-340	DG444	Integrated Circuit (Thru-hole Pkg)
U 205	3-00382-340	OP37	Integrated Circuit (Thru-hole Pkg)
U 206	3-00371-340	DG444	Integrated Circuit (Thru-hole Pkg)
U 207	3-00130-340	5532A	Integrated Circuit (Thru-hole Pkg)
U 208	3-00371-340	DG444	Integrated Circuit (Thru-hole Pkg)
U 209	3-00371-340	DG444	Integrated Circuit (Thru-hole Pkg)
U 210	3-00423-340	5534	Integrated Circuit (Thru-hole Pkg)
U 211	3-00143-340	LM393	Integrated Circuit (Thru-hole Pkg)
U 212	3-00037-340	74HC138	Integrated Circuit (Thru-hole Pkg)
U 213	3-00045-340	74HC32	Integrated Circuit (Thru-hole Pkg)
U 301	3-00130-340	5532A	Integrated Circuit (Thru-hole Pkg)
U 302	3-00130-340	5532A	Integrated Circuit (Thru-hole Pkg)
U 303	3-00130-340	5532A	Integrated Circuit (Thru-hole Pkg)
U 304	3-00130-340	5532A	Integrated Circuit (Thru-hole Pkg)
U 305	3-00423-340	5534	Integrated Circuit (Thru-hole Pkg)
U 306	3-00116-325	78L05	Transistor, TO-92 Package
U 307	3-00059-340	7542	Integrated Circuit (Thru-hole Pkg)
U 308	3-00091-340	LF412	Integrated Circuit (Thru-hole Pkg)
U 309	3-00130-340	5532A	Integrated Circuit (Thru-hole Pkg)
U 401	3-00392-340	PCM1750P	Integrated Circuit (Thru-hole Pkg)
U 501	3-00049-340	74HC74	Integrated Circuit (Thru-hole Pkg)
U 504	3-00265-340	74HC595	Integrated Circuit (Thru-hole Pkg)
U 505	3-00265-340	74HC595	Integrated Circuit (Thru-hole Pkg)
U 506	3-00265-340	74HC595	Integrated Circuit (Thru-hole Pkg)
U 507	3-00039-340	74HC14	Integrated Circuit (Thru-hole Pkg)
U 509	3-00114-329	7815	Voltage Reg., TO-220 (TAB) Package
U 510	3-00120-329	7915	Voltage Reg., TO-220 (TAB) Package
U 511	3-00096-340	LM317L	Integrated Circuit (Thru-hole Pkg)
U 512	3-00100-340	LM337L	Integrated Circuit (Thru-hole Pkg)
U 513	3-00116-325	78L05	Transistor, TO-92 Package
U 514	3-00117-325	78L12	Transistor, TO-92 Package
U 515	3-00116-325	78L05	Transistor, TO-92 Package
U 516	3-00123-325	79L12	Transistor, TO-92 Package
U 517	3-00122-325	79L05	Transistor, TO-92 Package
U 518	3-00112-329	7805	Voltage Reg., TO-220 (TAB) Package
U 519	3-00346-329	7812	Voltage Reg., TO-220 (TAB) Package
Z 0	0-00012-007	TO-220	Heat Sinks
Z 0	0-00043-011	4-40 KEP	Nut, Kep

REF.	SRS PART#	VALUE	DESCRIPTION
Z 0	0-00209-021	4-40X3/8PP	Screw, Panhead Phillips
Z 0	0-00231-043	1-32, #4 SHOULD	Washer, nylon
Z 0	0-00243-003	TO-220	Insulators
Z 0	0-00373-000	CARD EJECTOR	Hardware, Misc.
Z 0	1-00087-131	2 PIN JUMPER	Connector, Female

Chassis Assembly Parts List

REF.	SRS PART#	VALUE	DESCRIPTION
Z 0	0-00014-002	6J4	Power Entry Hardware
Z 0	0-00043-011	4-40 KEP	Nut, Kep
Z 0	0-00048-011	6-32 KEP	Nut, Kep
Z 0	0-00079-031	4-40X3/16 M/F	Standoff
Z 0	0-00084-032	36154	Termination
Z 0	0-00089-033	4"	Tie
Z 0	0-00098-042	#6 LOCK	Washer, lock
Z 0	0-00108-054	1" #26	Wire #26 UL1061
Z 0	0-00111-053	1-3/4"#24B	Wire #24 UL1007 Strip 1/4x1/4 Tin
Z 0	0-00112-053	1-3/4"#24R	Wire #24 UL1007 Strip 1/4x1/4 Tin
Z 0	0-00116-050	11-3/4"#18	Wire #18 UL1007 Stripped 3/8x3/8 No Tin
Z 0	0-00122-053	2-1/4" #24	Wire #24 UL1007 Strip 1/4x1/4 Tin
Z 0	0-00123-053	21" #24	Wire #24 UL1007 Strip 1/4x1/4 Tin
Z 0	0-00149-020	4-40X1/4PF	Screw, Flathead Phillips
Z 0	0-00168-023	6-32X5/16R	Screw, Roundhead Phillips
Z 0	0-00187-021	4-40X1/4PP	Screw, Panhead Phillips
Z 0	0-00190-030	#8X1"	Spacer
Z 0	0-00209-021	4-40X3/8PP	Screw, Panhead Phillips
Z 0	0-00210-020	4-40X5/16PF	Screw, Flathead Phillips
Z 0	0-00212-021	6-32X2PP	Screw, Panhead Phillips
Z 0	0-00231-043	1-32, #4 SHOULD	Washer, nylon
Z 0	0-00241-021	4-40X3/16PP	Screw, Panhead Phillips
Z 0	0-00248-026	10-32X3/8TRUSSP	Screw, Black, All Types
Z 0	0-00256-043	#6 SHOULDER	Washer, nylon
Z 0	0-00257-000	HANDLE3	Hardware, Misc.
Z 0	0-00259-021	4-40X1/2"PP	Screw, Panhead Phillips
Z 0	0-00310-010	HEX 3/8-32	Nut, Hex
Z 0	0-00330-050	5-1/2" #18	Wire #18 UL1007 Stripped 3/8x3/8 No Tin
Z 0	0-00331-031	4-40X5/8 F/F	Standoff
Z 0	0-00335-000	FAN GUARD 2	Hardware, Misc.
Z 0	0-00336-027	#4X1/4PP-B	Screw, Sheet Metal
Z 0	0-00337-027	#4X3/8PP-B	Screw, Sheet Metal
Z 0	0-00338-023	2-56X1/4RP	Screw, Roundhead Phillips
Z 0	0-00340-016	F0204	Power Button
Z 0	0-00343-027	#4X1/4PF-B	Screw, Sheet Metal
Z 0	0-00350-053	2-1/4" #24	Wire #24 UL1007 Strip 1/4x1/4 Tin
Z 0	0-00368-053	21" #24	Wire #24 UL1007 Strip 1/4x1/4 Tin
Z 0	0-00369-053	21" #24	Wire #24 UL1007 Strip 1/4x1/4 Tin
Z 0	0-00372-000	BE CU / FFT	Hardware, Misc.
Z 0	0-00377-004	SR760/830/780	Knobs
Z 0	0-00378-004	CAP 760/830/780	Knobs
Z 0	0-00382-000	CARD GUIDE 4.5"	Hardware, Misc.

REF.	SRS PART#	VALUE	DESCRIPTION
Z 0	0-00389-000	PHONO PLUG	Hardware, Misc.
Z 0	0-00390-024	1-72X1/4	Screw, Slotted
Z 0	0-00391-010	1-72X5/32X3/64	Nut, Hex
Z 0	0-00394-031	6-32X13/16	Standoff
Z 0	0-00415-031	4-40X1/2 M/F	Standoff
Z 0	0-00416-020	8-32X1/4PF	Screw, Flathead Phillips
Z 0	0-00417-057	GROMMET STRIP	Grommet
Z 0	0-00418-000	CLIP, CABLE	Hardware, Misc.
Z 0	0-00443-000	SWITCH	Hardware, Misc.
Z 0	0-00466-050	23" #18 BLACK	Wire #18 UL1007 Stripped 3/8x3/8 No Tin
Z 0	0-00467-050	23" #18 RED	Wire #18 UL1007 Stripped 3/8x3/8 No Tin
Z 0	0-00500-000	554808-1	Hardware, Misc.
Z 0	0-00521-048	3" #18	Wire, #18 UL1015 Strip 3/8 x 3/8 No Tin
Z 0	0-00527-050	13" #18	Wire #18 UL1007 Stripped 3/8x3/8 No Tin
Z 0	0-00893-026	8-32X3/8PF	Screw, Black, All Types
Z 0	1-00033-113	5 PIN, 18AWG/OR	Connector, Amp, MTA-156
Z 0	1-00073-120	INSL	Connector, BNC
Z 0	1-00076-171	4 PIN SIL	Cable Assembly, Ribbon
Z 0	1-00110-130	30 PIN DIL	Connector, Male
Z 0	1-00120-113	3 PIN, 18AWG/OR	Connector, Amp, MTA-156
Z 0	1-00131-171	30 COND DIL	Cable Assembly, Ribbon
Z 0	1-00132-171	34 COND	Cable Assembly, Ribbon
Z 0	1-00138-130	5 PIN SI	Connector, Male
Z 0	1-00141-171	5 PIN SIL	Cable Assembly, Ribbon
Z 0	1-00153-113	11 PIN,18AWG/OR	Connector, Amp, MTA-156
Z 0	1-00167-169	14/26 IDC-40 CE	Cable Assembly, Custom
Z 0	1-00168-169	34/60 CE TO IDC	Cable Assembly, Custom
Z 0	1-00180-170	9418	Cable Assembly, Multiconductor
Z 0	1-00183-171	20 COND	Cable Assembly, Ribbon
Z 0	2-00023-218	DPDT	Switch, Panel Mount, Power, Rocker
Z 0	2-00034-220	ENA1J-B20	SOFTPOT
Z 0	2-00035-222	SAS50B	Thermostat
Z 0	4-00541-435	130V/1200A	Varistor, Zinc Oxide Nonlinear Resistor
Z 0	4-00649-455	100K	Trim Pot, Cond. Plastic, PC Mount
Z 0	4-00681-436	SG240	Thermistor, ICL (Inrush Current Limiter)
Z 0	5-00134-529	100P	Cap, Monolythic Ceramic, 50V, 20%, Z5U
Z 0	5-00219-529	.01U	Cap, Monolythic Ceramic, 50V, 20%, Z5U
Z 0	6-00004-611	1A 3AG	Fuse
Z 0	6-00076-600	2" SPKR	Misc. Components
Z 0	6-00089-610	PLTFM II	Transformer
Z 0	7-00124-720	TRANSCOVER2-MOD	Fabricated Part
Z 0	7-00254-721	PLTFM-4	Machined Part
Z 0	7-00270-735	PLTFM-7	Injection Molded Plastic
Z 0	7-00281-720	PLTFM-18	Fabricated Part
Z 0	7-00284-720	PLTFM-20	Fabricated Part
Z 0	7-00286-720	7" CRT SCREEN	Fabricated Part
Z 0	7-00287-721	PLTFM-23	Machined Part
Z 0	7-00289-720	PLTFM-26	Fabricated Part
Z 0	7-00292-720	PLTFM-27	Fabricated Part
Z 0	7-00350-720	PLTFM-29	Fabricated Part
Z 0	7-00392-720	SR770-4	Fabricated Part

PARTS LIST

REF.	SRS PART#	VALUE	DESCRIPTION
Z 0	7-00393-720	SR770-5	Fabricated Part
Z 0	7-00396-701	PLTFM FP	Printed Circuit Board
Z 0	7-00403-720	SR770-9	Fabricated Part
Z 0	7-00404-720	SR770-10	Fabricated Part
Z 0	7-00406-720	SR770-12	Fabricated Part
Z 0	7-00407-720	SR770-13	Fabricated Part
Z 0	7-00409-720	SR770-15 & 16	Fabricated Part
Z 0	7-00414-720	SR770-17	Fabricated Part
Z 0	7-00421-735	PLTFM-9 THRU 13	Injection Molded Plastic
Z 0	7-00431-720	SR770-21/22	Fabricated Part
Z 0	7-00432-720	SR770-23	Fabricated Part
Z 0	7-00433-720	SR770-24	Fabricated Part
Z 0	7-00434-721	SR770-25	Machined Part
Z 0	7-00435-720	SR770-26	Fabricated Part
Z 0	7-00436-701	FFT/DSP LI	Printed Circuit Board
Z 0	7-00437-701	FFT/DSP LI	Printed Circuit Board
Z 0	7-00458-720	SR850-6	Fabricated Part
Z 0	7-00459-720	SR850-7	Fabricated Part
Z 0	7-00471-720	SCREEN	Fabricated Part
Z 0	7-00473-720	SR770-27/28/29	Fabricated Part
Z 0	7-00495-740	SR770S-1	Keypad, Conductive Rubber
Z 0	7-00519-709	FFT	Lexan Overlay
Z 0	7-00718-720	SR770-33	Fabricated Part
Z 0	8-00034-850	FLOPPY	Disk Drive
Z 0	8-00040-840	7" Z-AXIS	CRT Display
Z 0	9-00267-917	GENERIC	Product Labels

Miscellaneous Parts List

REF.	SRS PART#	VALUE	DESCRIPTION
U 301	3-00450-342	27C010-120	EPROM/PROM, I.C.
U 302	3-00450-342	27C010-120	EPROM/PROM, I.C.
U 303	3-00345-342	27C512-120	EPROM/PROM, I.C.
U 304	3-00345-342	27C512-120	EPROM/PROM, I.C.
U 504	3-00345-342	27C512-120	EPROM/PROM, I.C.
Z 0	0-00089-033	4"	Tie
Z 0	0-00159-000	FAN GUARD	Hardware, Misc.
Z 0	0-00179-000	RIGHT FOOT	Hardware, Misc.
Z 0	0-00180-000	LEFT FOOT	Hardware, Misc.
Z 0	0-00185-021	6-32X3/8PP	Screw, Panhead Phillips
Z 0	0-00187-021	4-40X1/4PP	Screw, Panhead Phillips
Z 0	0-00204-000	REAR FOOT	Hardware, Misc.
Z 0	0-00223-029	6-32X3/8TR PH	Screw, Truss Phillips
Z 0	0-00248-026	10-32X3/8TRUSSP	Screw, Black, All Types
Z 0	0-00259-021	4-40X1/2"PP	Screw, Panhead Phillips
Z 0	0-00315-021	6-32X7/16 PP	Screw, Panhead Phillips
Z 0	7-00147-720	BAIL	Fabricated Part
Z 0	7-00394-720	SR770-6	Fabricated Part
Z 0	7-00395-720	SR770-7	Fabricated Part
Z 0	7-00402-720	SR770-8	Fabricated Part
Z 0	7-00405-720	SR770-11	Fabricated Part

REF.	SRS PART#	VALUE	DESCRIPTION
Z 0	7-00408-720	SR770-14	Fabricated Part

Addendum

Operation of the USB drive

The USB drive can emulate up to 43 separate 1.44 MB "floppy disks." The current floppy drive ID number is shown on the 7-segment display on the front panel of the display. To change the ID use the pushbuttons on the front panel to cycle through the digits. Each drive is completely separate and must be formatted individually and has its own disk directory.

The USB drive MUST be formatted by the SR780/SR785/770/850 to function properly.

To format a USB drive:

1) After the instrument has been turned on and has completed its power on test insert a USB stick with at least 100 MB capacity into the USB connector on the front panel.
2) Wait for the light on the USB stick to stop flashing.
3) Using the push buttons set the ID number on the drive to the desired setting. (Usually this can just be left at 0.)
4) Navigate to the "Disk Upkeep" sub-menu of the "Disk" menu. Press "Format Floppy" and "Enter" to confirm. The light on the USB stick should flash as the drive is being formatted.
5) You can now use the instrument exactly as if a floppy disk were present. All the save, recall and disk directory options work exactly the same on the USB drive.
6) Do not remove the USB drive while in the middle of a disk operation as this may corrupt the drive.

Stanford Research Systems
1290-D Reamwood Ave. 408.744.9040
Sunnyvale, CA 94089 www.thinksrs.com

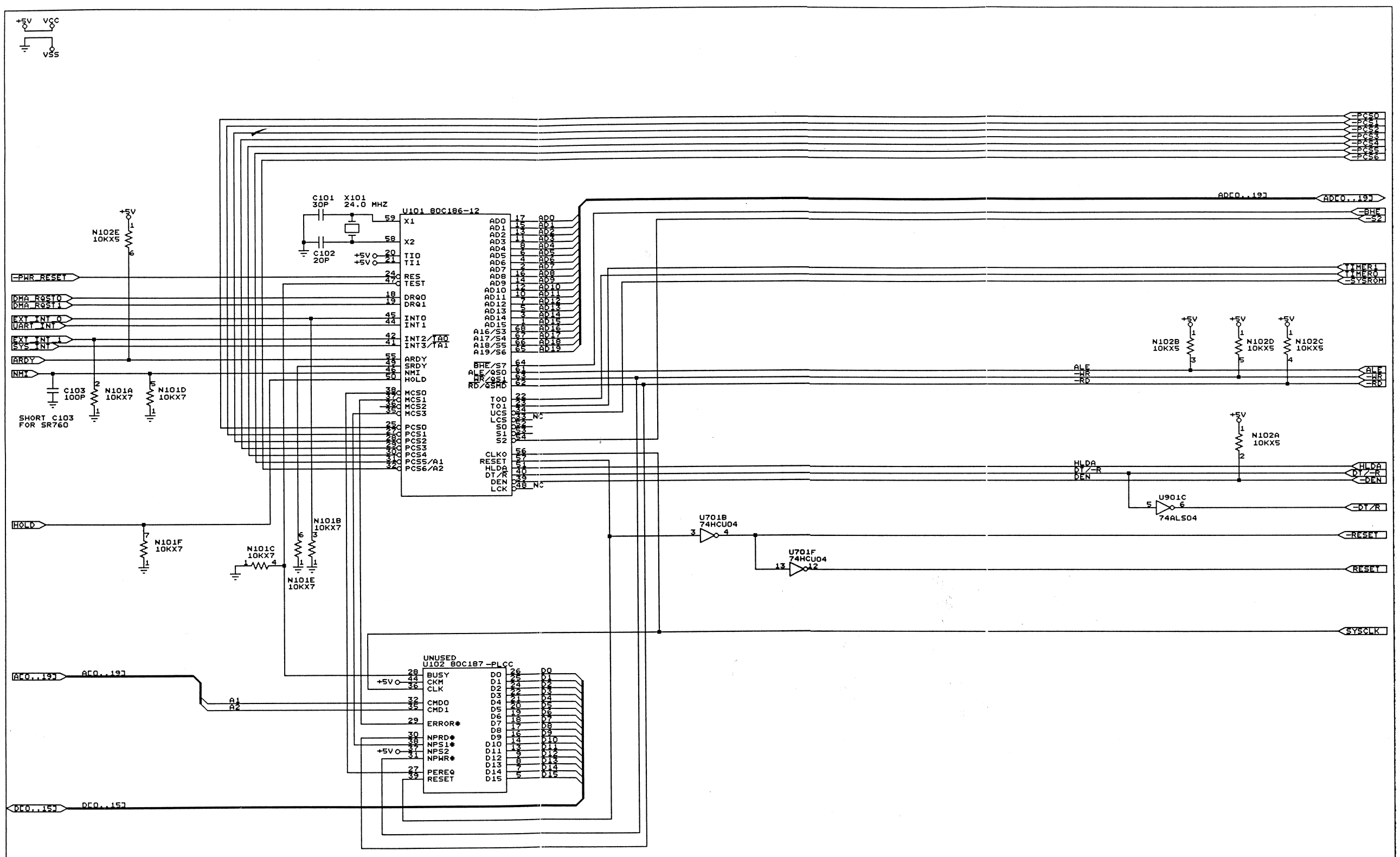

STANFORD RESEARCH SYSTEMS, Inc.	
1290-D Reamwood Avenue Sunnyvale, CA 94089 (408) 744-9040	
Title	CPU
Size: C	Document Number: SR003-1 — REV: D

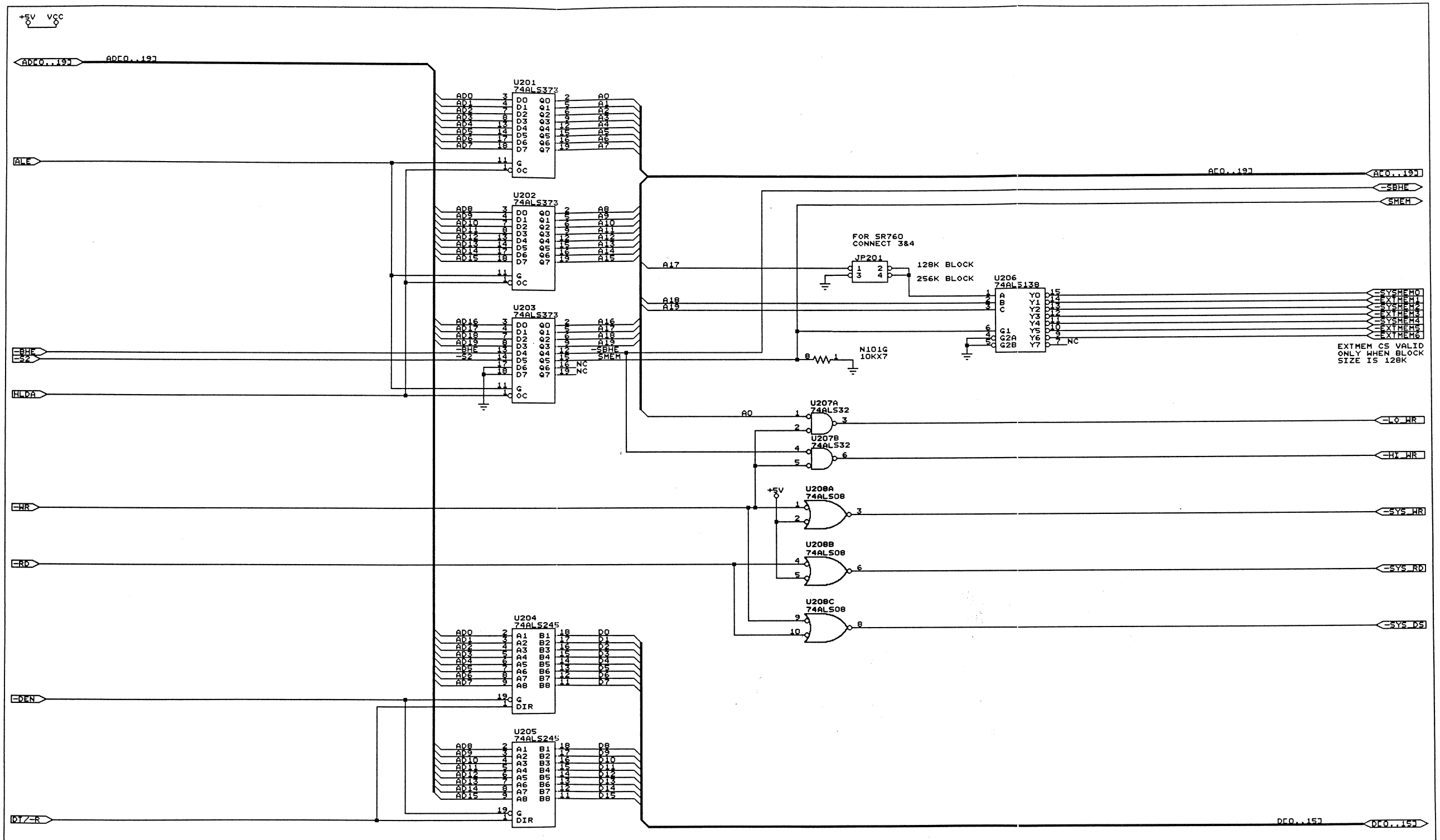

STANFORD RESEARCH SYSTEMS, Inc.
1290-D Reamwood Avenue
Sunnyvale, CA 94089
(408) 744-9040

Title: ADDRESS AND DATA BUFFERS

Size	Document Number	REV
C	SR003-2	D

SYSTEM BOOT ROM (256K BYTES OR 128K BYTES)

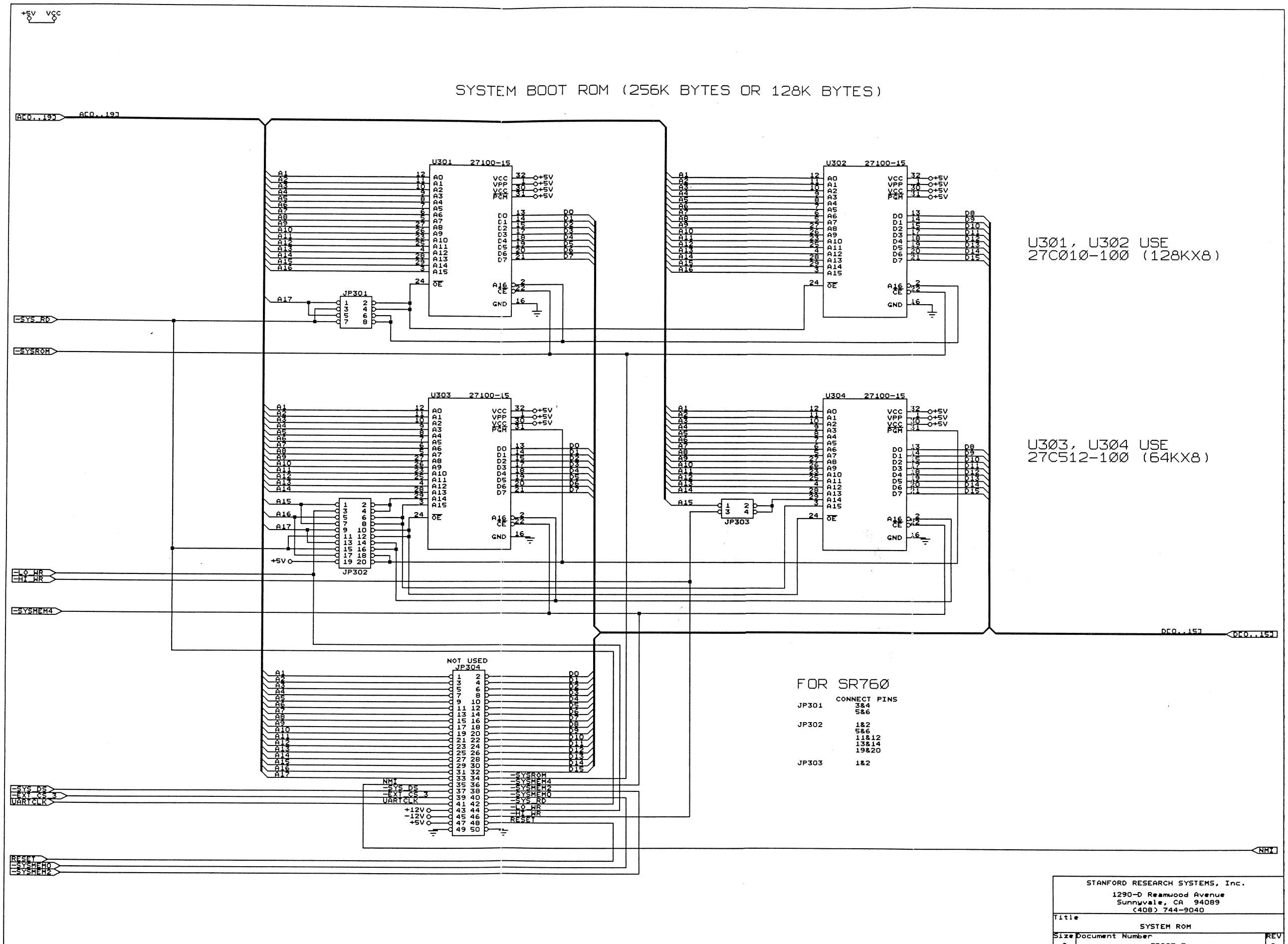

U301, U302 USE
27C010-100 (128KX8)

U303, U304 USE
27C512-100 (64KX8)

FOR SR760

	CONNECT PINS
JP301	3&4 5&6
JP302	1&2 5&6 11&12 13&14 19&20
JP303	1&2

STANFORD RESEARCH SYSTEMS, Inc.
1290-D Reamwood Avenue
Sunnyvale, CA 94089
(408) 744-9040

Title		
SYSTEM ROM		
Size: C	Document Number: SR003-3	REV: D

LOW PROGRAM RAM (256K BYTES OR 64K BYTES)
BATTERY BACKED UP

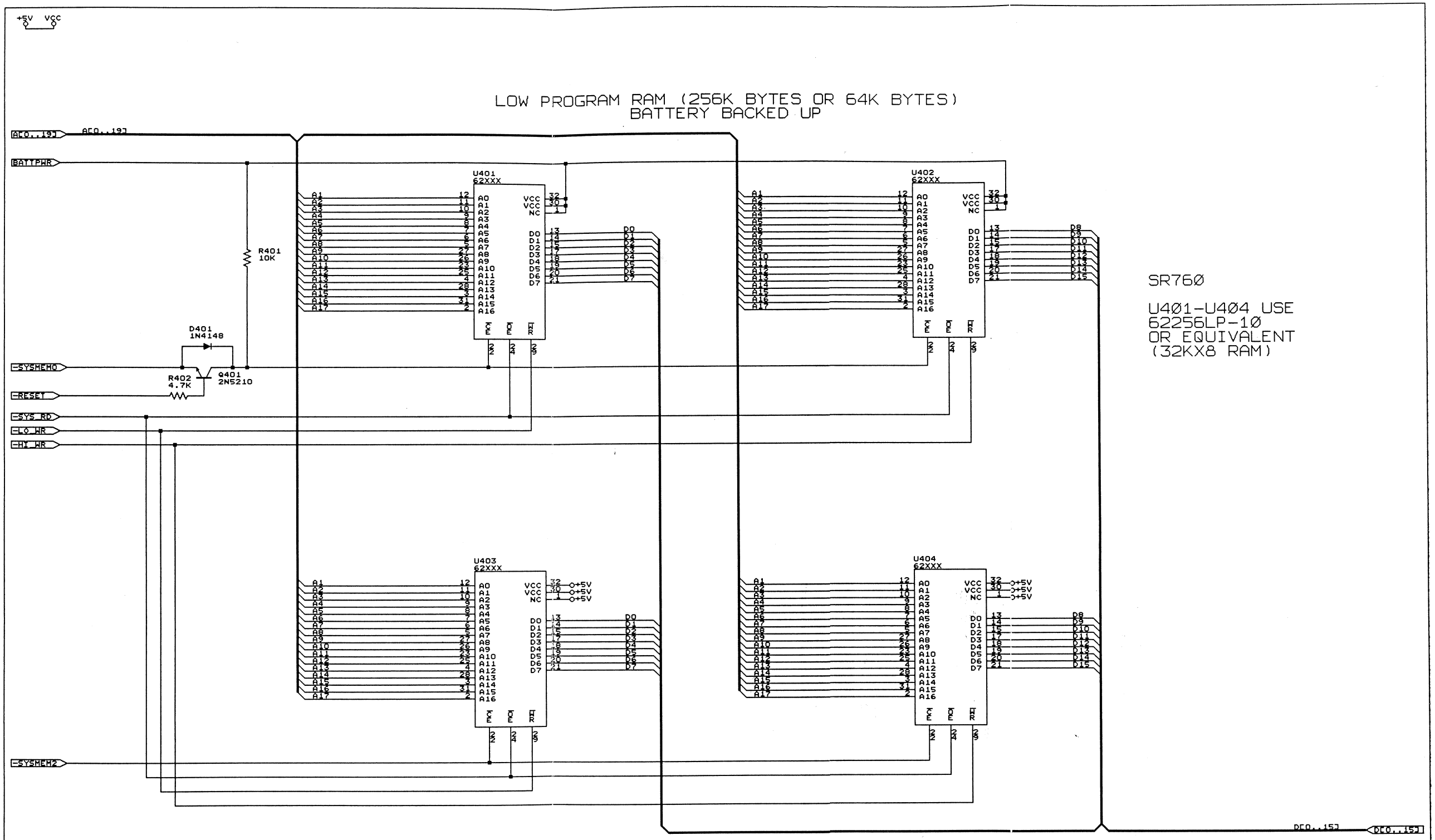

SR760

U401-U404 USE
62256LP-10
OR EQUIVALENT
(32KX8 RAM)

PROGRAM RAM (256K BYTES OR 64K BYTES)

STANFORD RESEARCH SYSTEMS, Inc.		
1290-D Reamwood Avenue Sunnyvale, CA 94089 (408) 744-9040		
Title: SYSTEM RAM		
Size: C	Document Number: SR003-4	REV: D

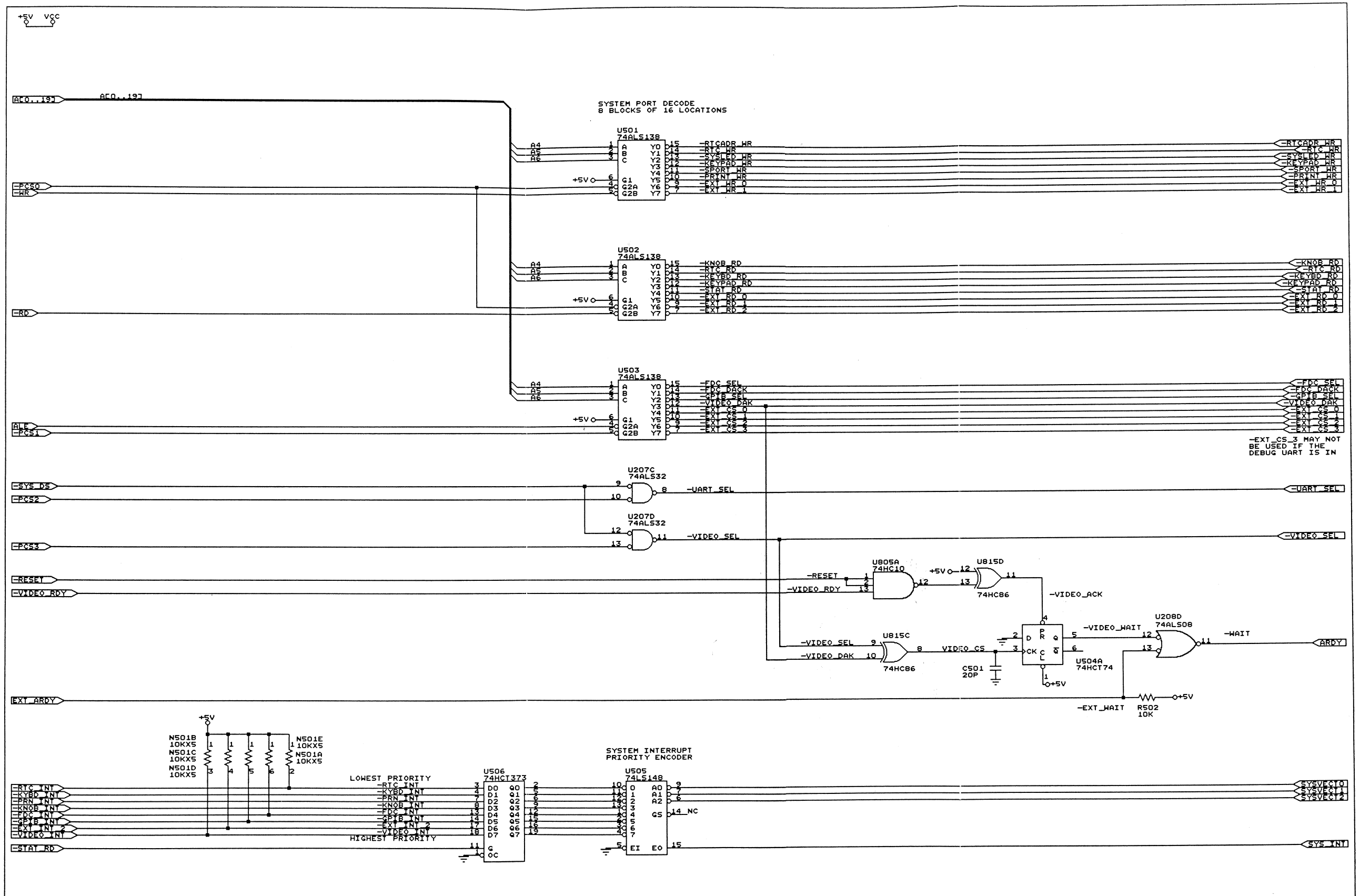

STANFORD RESEARCH SYSTEMS, Inc.
1290-D Reamwood Avenue
Sunnyvale, CA 94089
(408) 744-9040

Title		
SYSTEM DECODE		
Size	Document Number	REV
C	SR003-5	D

DI0..15

IBM SERIAL KEYBOARD
KEYBD INPUT ONLY

JP601
DIN5
GND
+5V
KCLK
KDAT
KRST

-RESET

C601
47U-E16
C602
330P
C603
330P

R601
10K
R602
10K

U612A
74HC14

U701C
74HCU04

U601A
74HCT74

U601B
74HCT74

-KYBD INT

U603
74HC595
QH'
G
RCLK
SRCLR
SRCLK
SER
QH
QG
QF
QE
QD
QC
QB
QA

-KEYBD RD

N601A
22KX9
SPARE
N601I
22KX9
N601H
22KX9
N601G
22KX9
N601F
22KX9
N601E
22KX9
N601D
22KX9
N601C
22KX9
N601B
22KX9

U606
74HCT244

KEYCOL0
KEYCOL1
KEYCOL2
KEYCOL3
KEYCOL4
KEYCOL5
KEYCOL6
KEYCOL7

KEYCOL0..7

U607
74HCT374
CLK
OC

D601
D602
D603
D604
1N4148
D605
D606
D607
D608

FRONT PANEL CONNECTOR
KEYPAD & KNOB

JP602
HEADER15X2

KEYROW0
KEYROW1
KEYROW2
KEYROW3
KEYROW4
KEYROW5
KEYROW6
KEYROW7
KNOB_A
KNOB_B

-KEYPAD RD
-KEYPAD WR

U608
74HCT244

SYSVECT0
SYSVECT1
SYSVECT2
50/-60
-PRN BUSY
PRN ERROR
KNOBA
KNOBB

JUMPER FOR
50/60 HZ OPERATION

JP603

U609
74HCT374

-PRN STRB
PRN/-INIT
PRNINT EN
-SPKR EN
DMA SELECT
SPARE
SPARE
SPARE

-STAT RD
-SPORT WR

U610A
74HCT74

U610B
74HCT74

U612B
74HC14

U612C
74HC14

U602A
74HC20

U612F
74HC14

-KNOB INT

U611A
74HCT74

U611B
74HCT74

U612D
74HC14

U612E
74HC14

-KNOB RD

+5V VCC

STANFORD RESEARCH SYSTEMS, Inc.
1290-D Reamwood Avenue
Sunnyvale, CA 94089
(408) 744-9040

Title
SYSTEM I/O A

Size C | Document Number SR003-6 | REV D

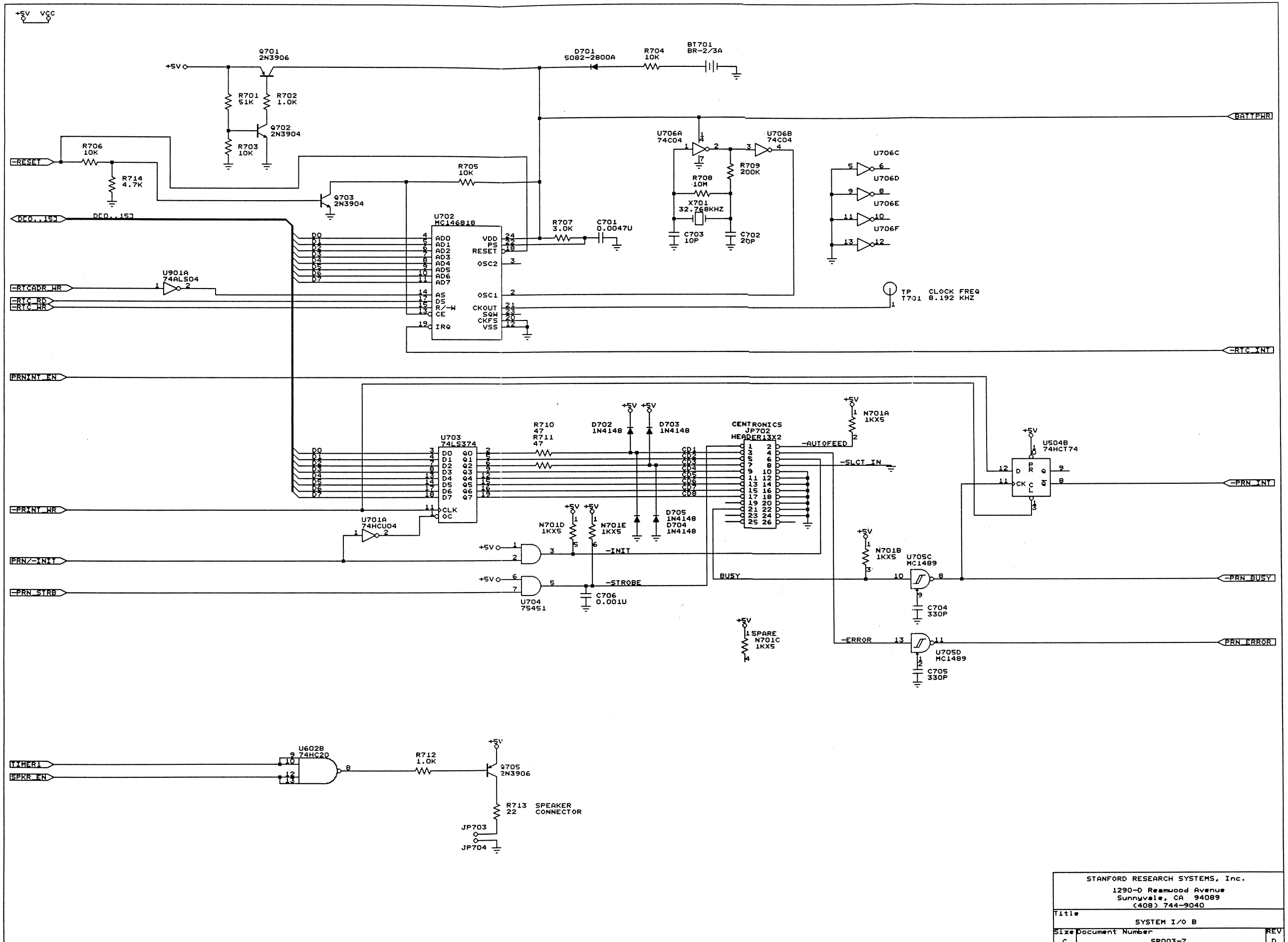

STANFORD RESEARCH SYSTEMS, Inc.	
1290-D Reamwood Avenue Sunnyvale, CA 94089 (408) 744-9040	
Title	SYSTEM I/O B
Size: C	Document Number: SR003-7
REV: D	

+5V
VCC
C803 2.2U
C804 2.2U
C805 2.2U
C806 2.2U
C807 2.2U
C808 2.2U
-VIDEO INT
-VIDEO RDY
-VIDEO DRQ
R801 1.0M
U801F 74HCU04
DOT CLK
U801A 74HCU04
R802 270
X801 13.5168MHZ
C801 62P
C802 62P
U802 74HCT191
LOAD
RCO
CLK
MX/MN
D/U
U803A 74HC11
VLOAD
U804 74HCT299
U809 74HCT299
U808 74HCT164
CLK
CLR
U806B 74HCT74
U807A 74HCT74
U803C 74HC11
VIDEO DOT
DISP EN
SELECT FOR CONTRAST
R808 240
R809 470
VIDEO
ORANGE J3 PAD
WHITE J2 PAD
J1 PAD
RED
BRIGHTNESS POT CONNECTOR
JP803 HEADER3
BRT LOW
BRT MID
BRT HI
VIDEO CONNECTOR JP801 HEADER10X2
VGND
HSYNC
VIDEO
VSYNC
N801A 10KX5
N801B 10KX5
U815A 74HC86
U815B 74HC86
JP802 HEADER2X2 SYNC POLARITY
-AS
U807B 74HCT74
U901F 74AL504
-MCYC
VLD/-DMY
-DRAW
MCYC
U803B 74HC11
N801D 10KX5
N801E 10KX5
N801C 10KX5
U810 HD63484
2CLK
LPSTB
DONE
DREQ
DACK
DTACK
RES
IRQ
R/-W
CS
RS
-VIDEO DAK
-RESET
A0..19
-VIDEO SEL
D0..15
VSYNC
HSYNC
DISP1
DISP2
CUD1
CUD2
EXSYNC
CHR
MRD
DRAW
MCYC
AS
MAD0
MAD1
MAD2
MAD3
MAD4
MAD5
MAD6
MAD7
MAD8
MAD9
MAD10
MAD11
MAD12
MAD13
MAD14
MAD15
MAD16/RA0
MAD17/RA1
MAD18/RA2
MAD19/RA3
RA4
U801B 74HCU04
U801C 74HCU04
U801D 74HCU04
U801E 74HCU04
U805B 74HC10
U805C 74HC10
MWR
MRD
GD0..15
U811 74HCT374
U812 74HCT374
U813 62256
U814 62256
GA0..14
SPARE
U806A 74HCT74

STANFORD RESEARCH SYSTEMS, Inc. 1290-D Reamwood Avenue Sunnyvale, CA 94089 (408) 744-9040		
Title: VIDEO GRAPHICS INTERFACE		
Size: C	Document Number: SR003-B	REV: D

+5V VCC

DFD..15J
AFD..19J
-FDC SEL
-SYS RD
-SYS WR
RESET
-FDC DACK
EXT DMA 0
EXT DMA 1
DMA SELECT
-VIDEO DRQ
-GPIB SEL
-RESET
-UART SEL

U907 DP8473-DIP
VCC
OSC1
OSC2/CLK
RD
WR
A0
A1
A2
INT
RESET
D0
D1
D2
D3
D4
D5
D6
D7
DAK
TC
DRQ
DRVTYP
PUMP/PREN
GNDB
GNDC
GNDD
VCCA
RPM/LC
INDEX
DR0
DR1
MTR1
MTR0
DIR
STEP
WDATA
WGATE
TRK0
WRT PRT
RDATA
HD SEL
DSKCHG
SETCUR
FILTER
FGND500
FGND250
GNDA

C901 10P
X901 24.0MHZ
C902 10P
C903 1000P
R901 5.6K
R904 560
R905 560
C904 0.027U
C905 0.047U
C906 1000P

N901A 150X5
N901B 150X5
N901C 150X5
N901D 150X5
N901E 150X5

JP901 FDC CONNECTOR

U701E 74HCU04
N902A 10KX4
-FDC INT

U901D 74ALS04
U901B 74ALS04
U901E 74ALS04

U902 TMS9914A
D7(LSB)
D0(MSB)
TE
WE
DBIN
RS0
RS1
RS2
CE
RESET
CLOCK
INT
DIO1
DIO2
DIO3
DIO4
DIO5
DIO6
DIO7
DIO8
ACCGR
ACCRQ
TR
REN
IFC
NDAC
NRFD
DAV
EOI
ATN
SRQ
CONT

U903 75160A
U904 75161A

JP902
SHIELD
GND
GPIB CONNECTOR

GPIB INT
UARTCLK
UART INT

U905 SCN2641
A0
A1
D0
D1
D2
D3
D4
D5
D6
D7
R/W
CE
BRCLK
INTR
TXD
TXC
RTS
DCD
CTS
RXD
RXC

N902D 10KX4

U906 MC1488

JP903 RS232 CONNECTOR
DATA OUT
DATA IN
CTS
DTR
DSR
GND
GND
CD

U705A MC1489
U705B MC1489
R913 1.0K
C907 330P
C908 330P

R911 1.0M
U701D 74HCU04
R912 270
C909 62P
X902 3.6864MHZ
C910 62P

U908 74HCT157
1A 1Y
1B
2A 2Y
2B
3A 3Y
3B
4A 4Y
4B
A/B
G
EXT DMA 0
EXT DMA 1
VIDEO RQST
FDC RQST
DMA RQST0
DMA RQST1
DMA SELECT

N902B 10KX4
N902C 10KX4

STANFORD RESEARCH SYSTEMS, Inc.
1290-D Reamwood Avenue
Sunnyvale, CA 94089
(408) 744-9040

Title: SYSTEM INTERFACES
Size: C
Document Number: SR003-9
REV: D

EXPANSION CONNECTOR

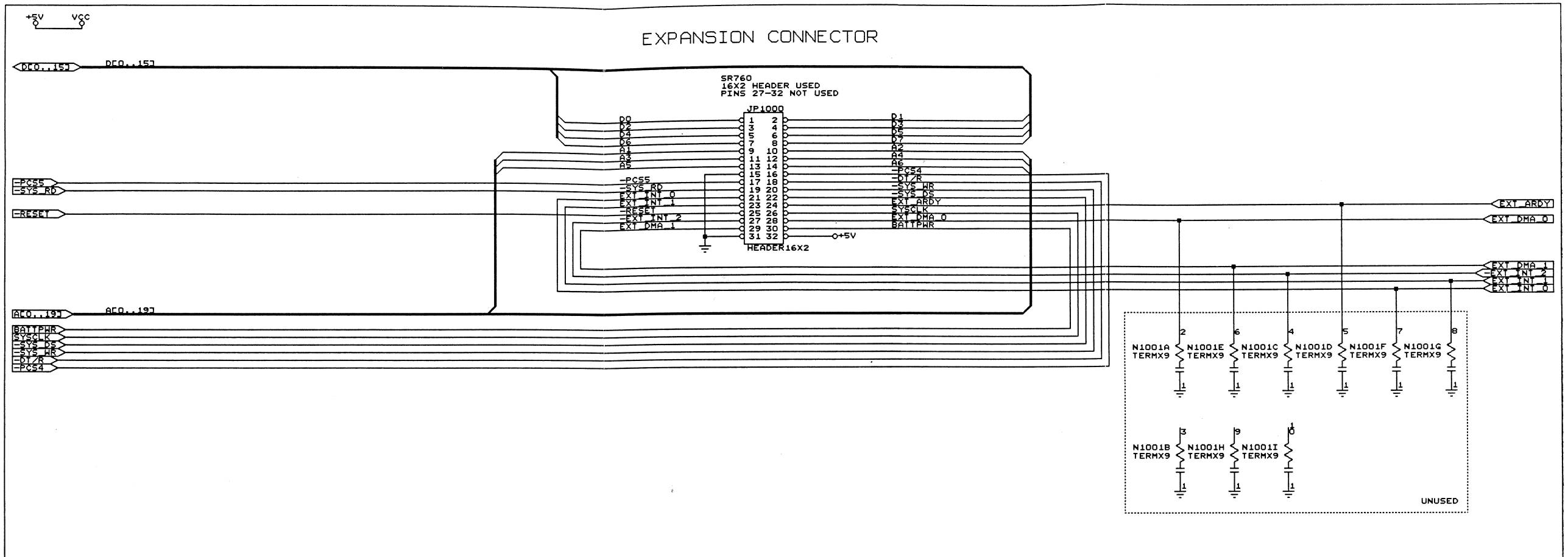

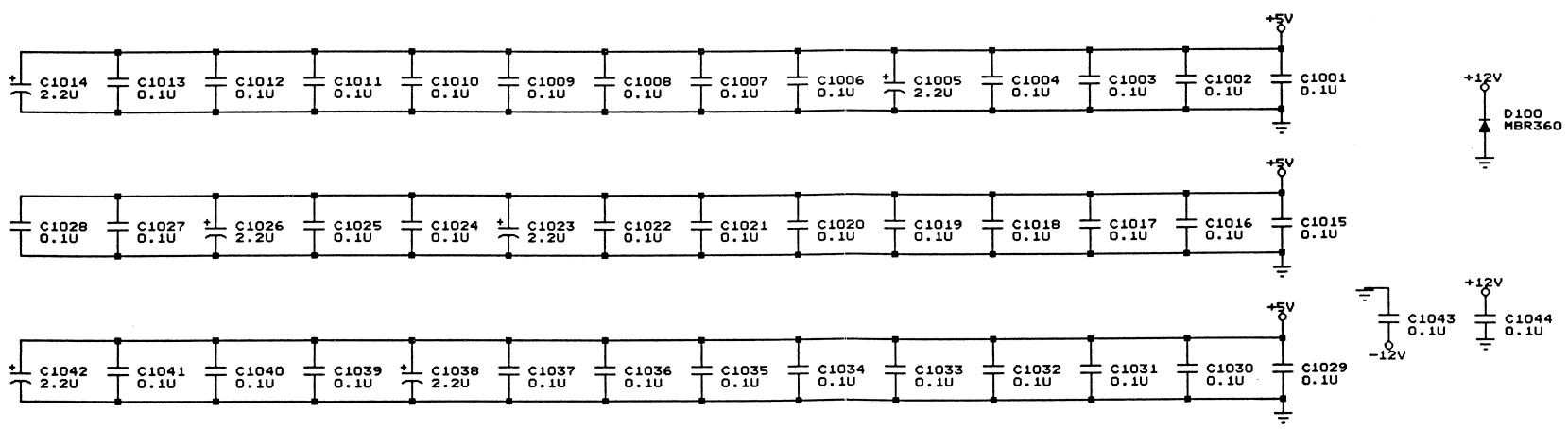

POWER CONNECTOR

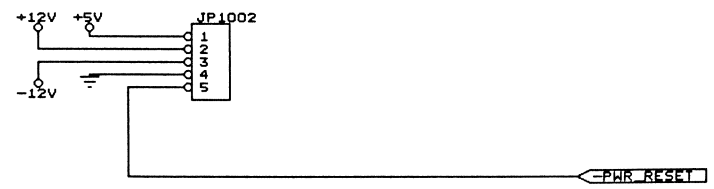

STANFORD RESEARCH SYSTEMS, Inc.	
1290 D Reamwood Ave. Sunnyvale, CA 94089 (408)744-9040	
Title	SYSTEM INTERCONNECT
Size: C	Document Number: SR003-10
REV: D	

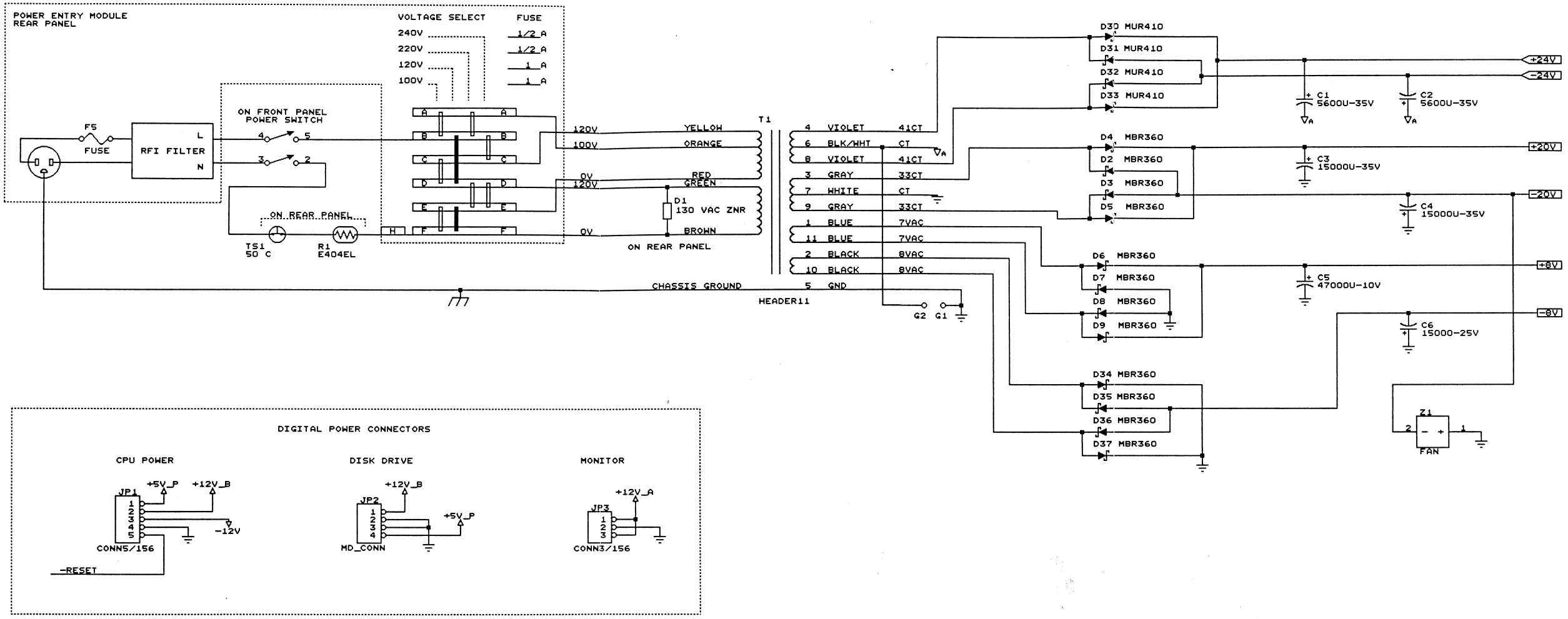

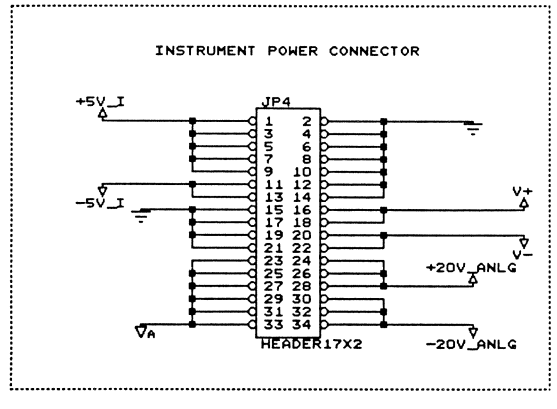

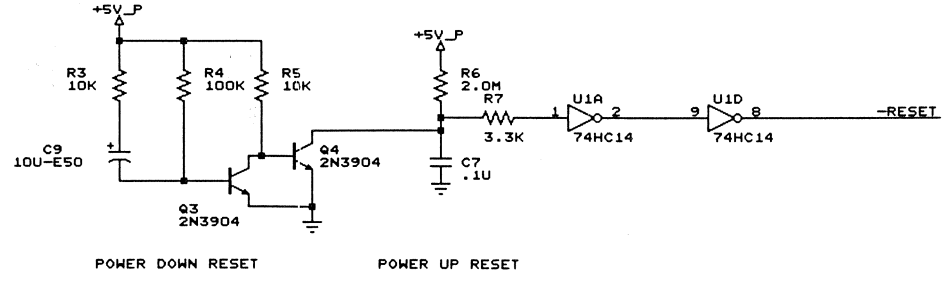

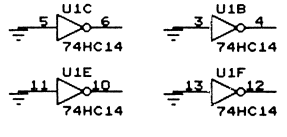

STANFORD RESEARCH SYSTEMS		
Title: UNREGULATED SUPPLIES		
Size: C	Document Number: SR004-1	REV: E

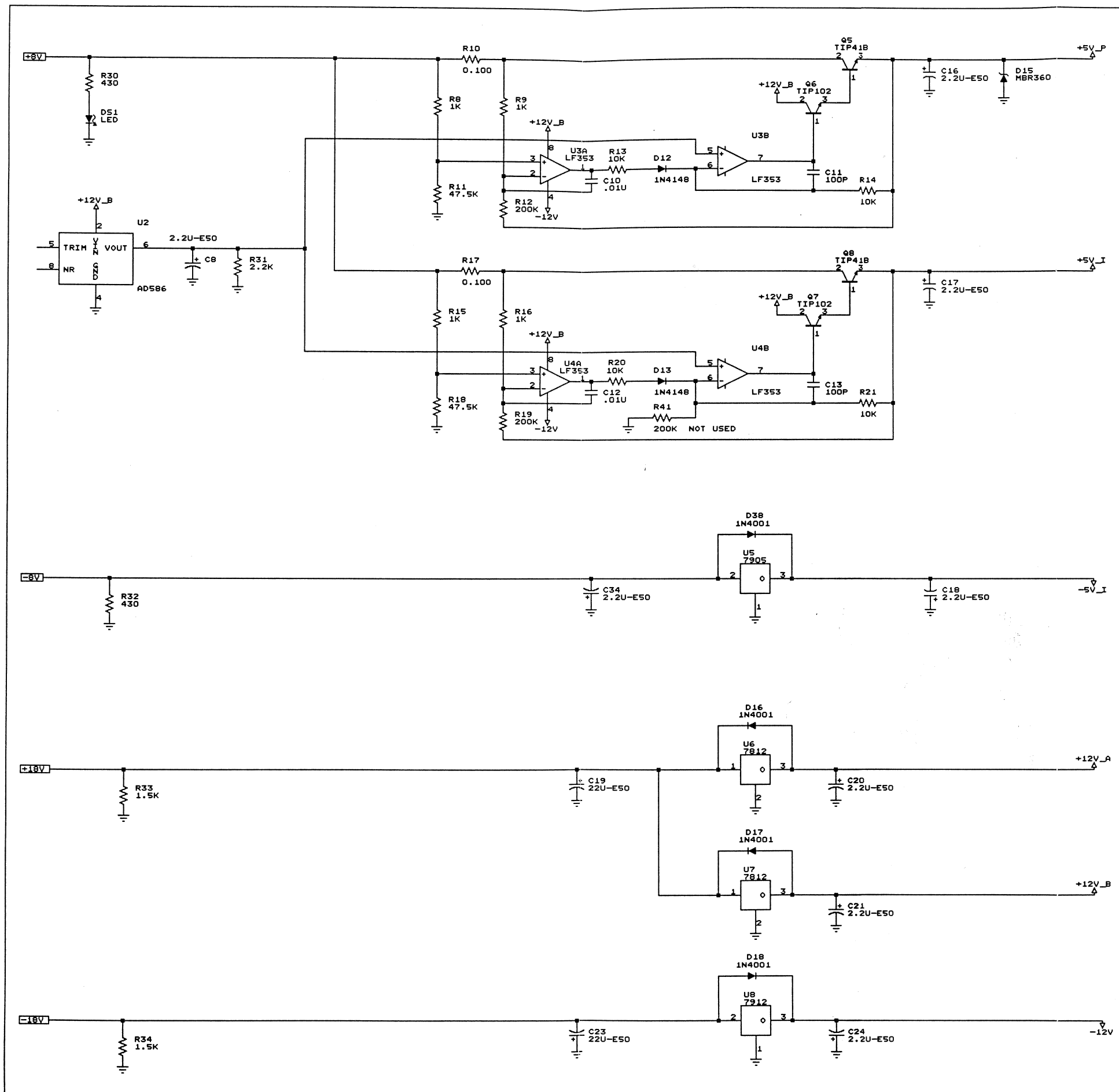

STANFORD RESEARCH SYSTEMS		
Title: DIGITAL SYSTEM SUPPLIES		
Size: C	Document Number: SR004-2	REV: E

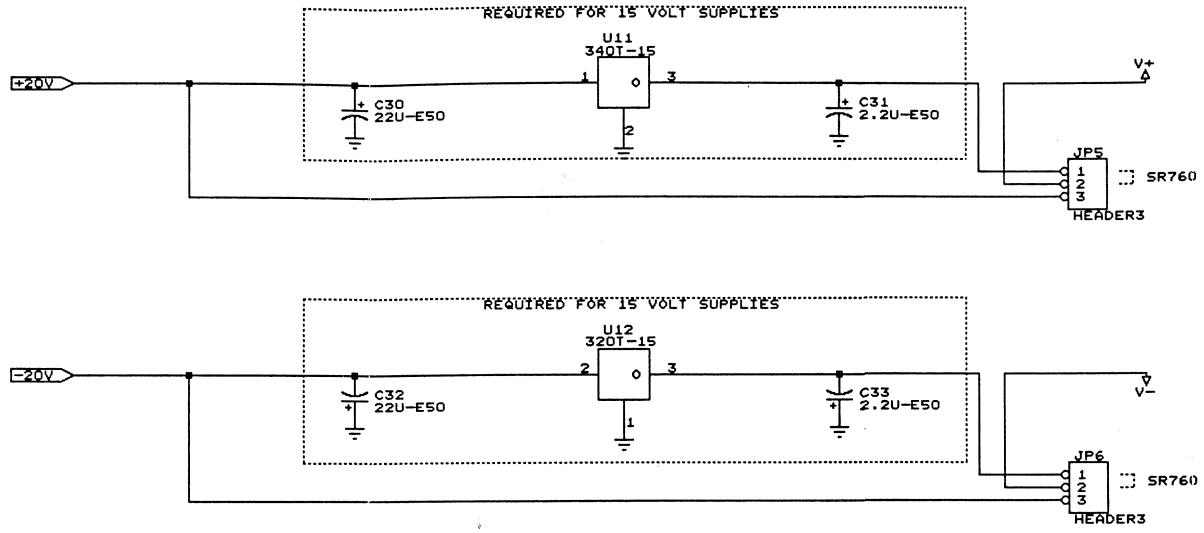

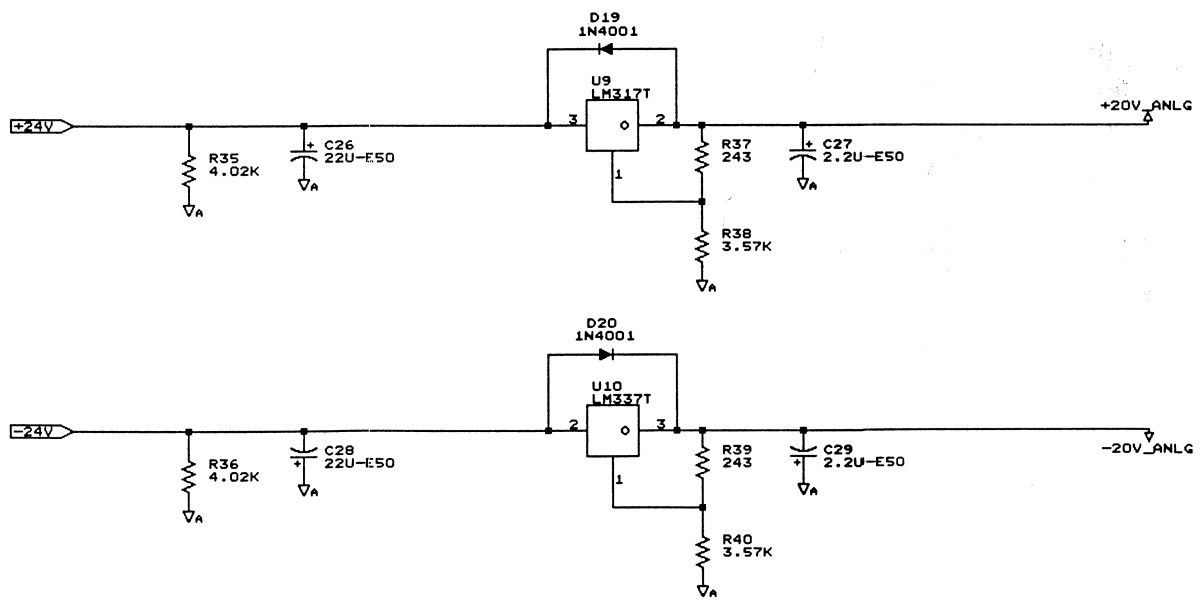

STANFORD RESEARCH SYSTEMS		
Title: ANALOG SUPPLIES		
Size: C	Document Number: SR004-3	REV: E

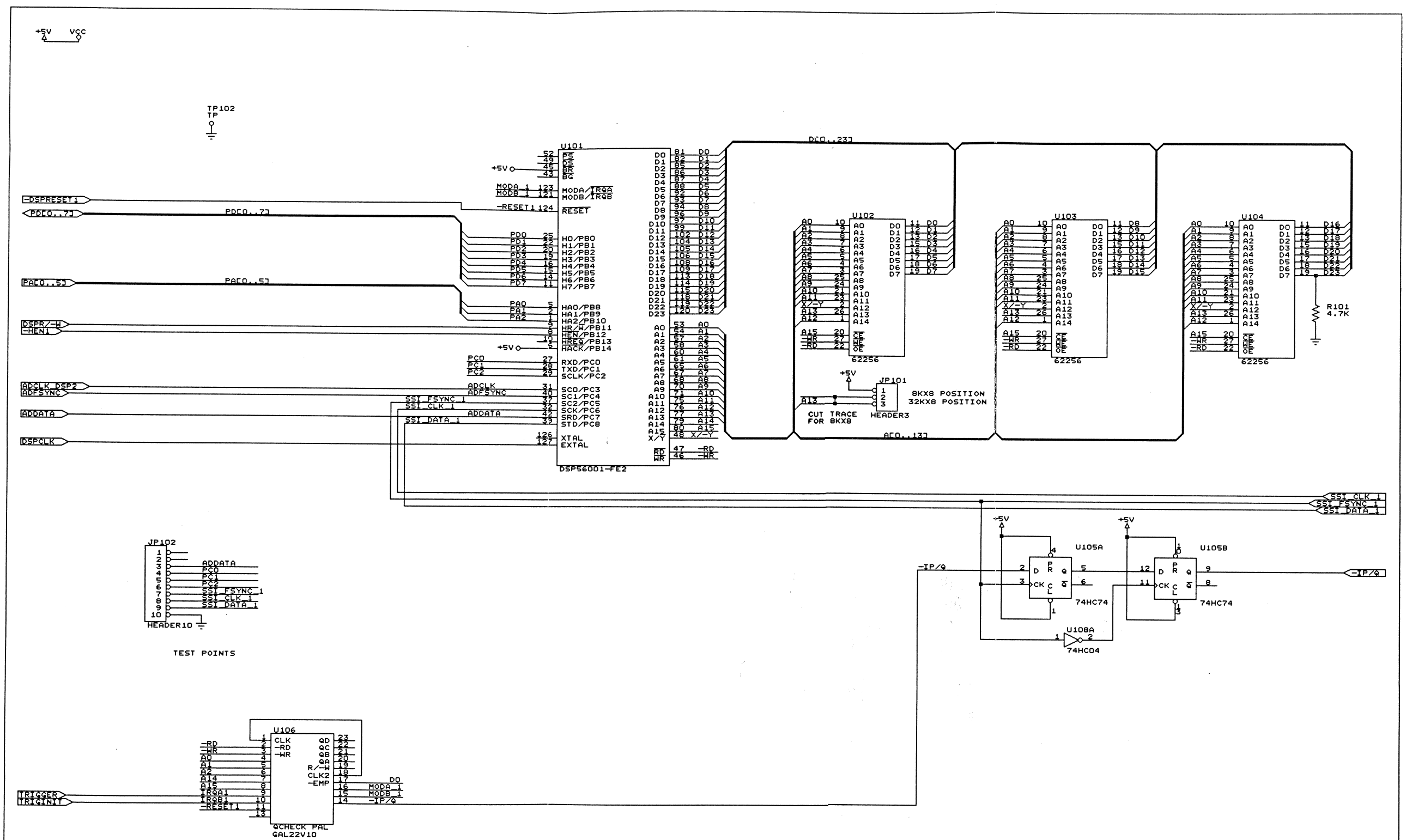

STANFORD RESEARCH SYSTEMS 1290-D Reamwood Ave. Sunnyvale, CA 94089 (408) 744-9040		
Title: DSP FILTERING AND HETERODYNING		
Size: C	Document Number: DGFFT1	REV: G

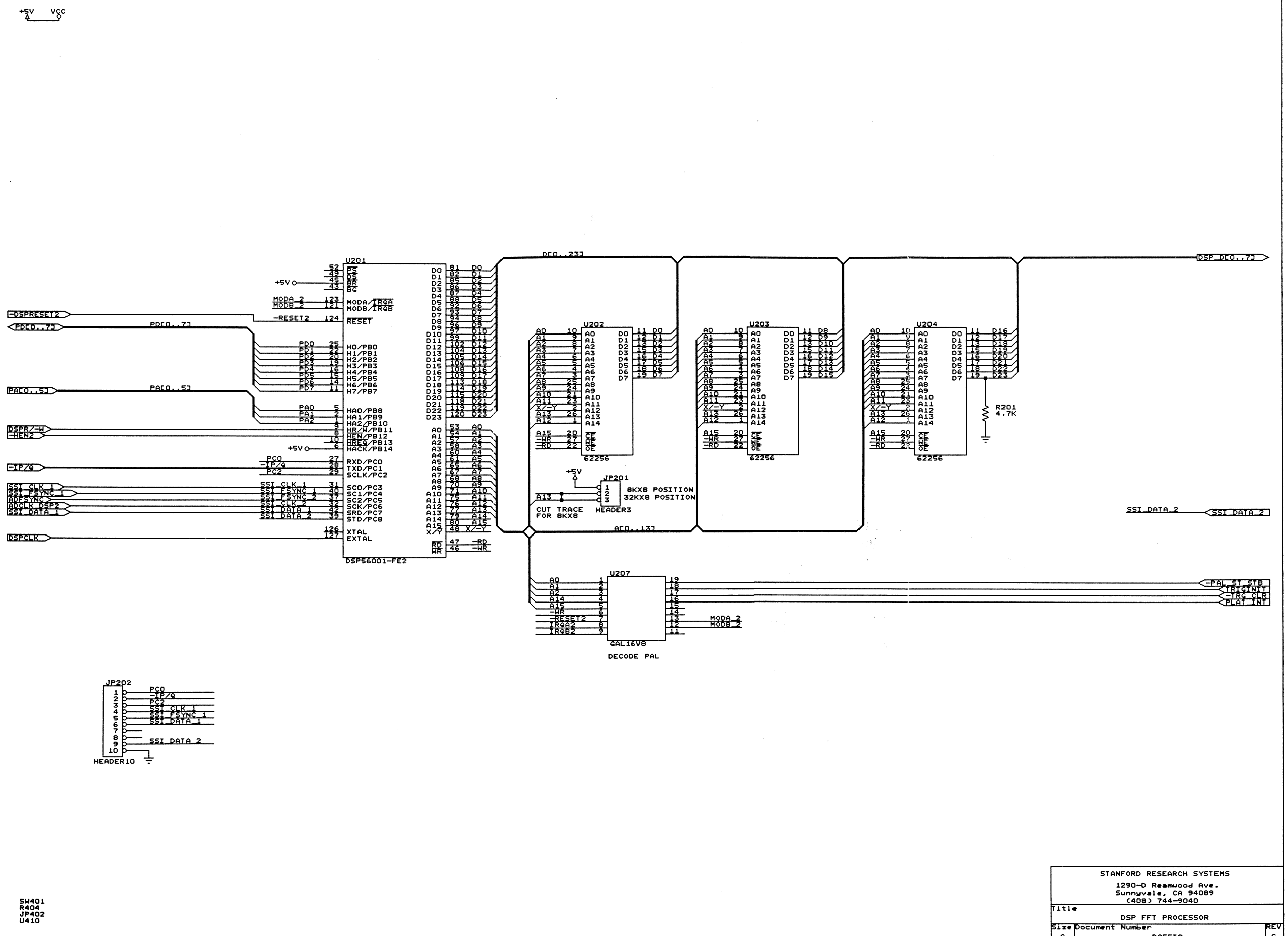
+5V
VCC
U201
DSP56001-FE2
U202
62256
U203
62256
U204
62256
R201
4.7K
JP201
8KX8 POSITION
32KX8 POSITION
HEADER3
CUT TRACE
FOR 8KX8
U207
GAL16V8
DECODE PAL
JP202
HEADER10
DSP D[0..7]
SSI DATA 2
SW401
R404
JP402
U410
STANFORD RESEARCH SYSTEMS
1290-D Reamwood Ave.
Sunnyvale, CA 94089
(408) 744-9040
Title
DSP FFT PROCESSOR
Size
C
Document Number
DGFFT2
REV
G

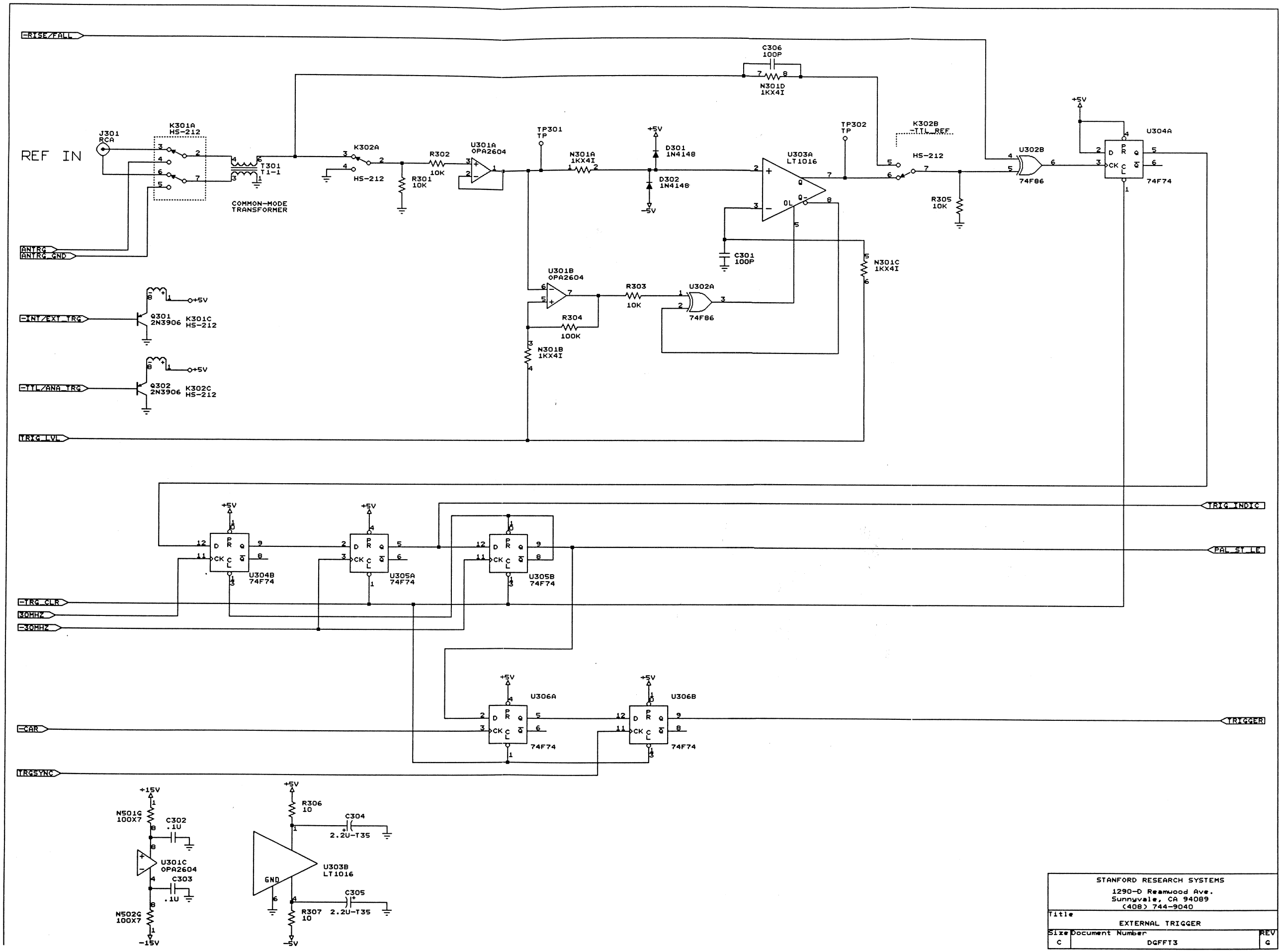

STANFORD RESEARCH SYSTEMS		
1290-D Reamwood Ave. Sunnyvale, CA 94089 (408) 744-9040		
Title: EXTERNAL TRIGGER		
Size: C	Document Number: DGFFT3	REV: G

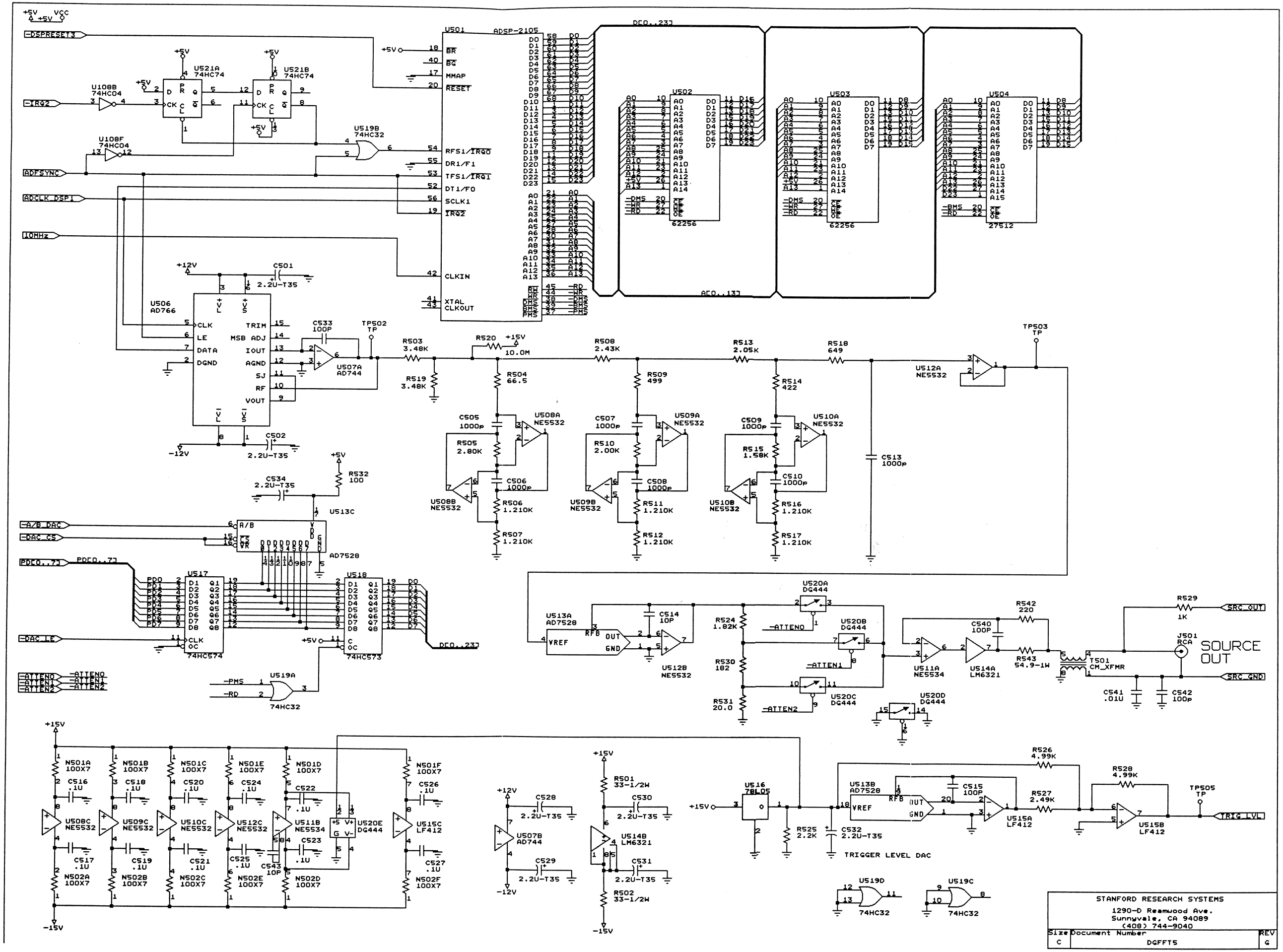

U501 ADSP-2105
U502 62256
U503 62256
U504 27512
U506 AD766
U507A AD744
U507B AD744
U513A AD7528
U513B AD7528
U513C AD7528
U514B LM6321
U515A LF412
U515B LF412
U516 78L05
U517 74HC574
U518 74HC573
U519A 74HC32
U519B 74HC32
U519C 74HC32
U519D 74HC32
U520A DG444
U520B DG444
U520C DG444
U520D DG444
U521A 74HC74
U521B 74HC74
U108B 74HC04
U108F 74HC04
U511A NE5534
U511B NE5534
U512A NE5532
U512B NE5532
U514A LM6321
U508A NE5532
U508B NE5532
U509A NE5532
U509B NE5532
U510A NE5532
U510B NE5532
U508C NE5532
U509C NE5532
U510C NE5532
U512C NE5532
J501 RCA
SOURCE OUT
SRC_OUT
SRC_GND
TP501 CM_XFMR
TRIGGER LEVEL DAC
TRIG_LVL
TP502 TP
TP503 TP
TP505 TP
-DSPRESET3
-IRQ2
ADFSYNC
ADCLK_DSP1
10MHz
-A/B_DAC
-DAC_CS
PD[0..7]
-DAC_LE
-ATTEN0
-ATTEN1
-ATTEN2
D[0..23]
A[0..13]
STANFORD RESEARCH SYSTEMS
1290-D Reamwood Ave.
Sunnyvale, CA 94089
(408) 744-9040
Size C
Document Number DGFFT5
REV G

STANFORD RESEARCH SYSTEMS
1290-D Reamwood Ave.
Sunnyvale, CA 94089
(408) 744-9040

PLATFORM INTERFACE AND POWER

Size C | Document Number DGFF16 | REV G

Title

+5V
74F86
U302D
U302C
L602 BEAD3
U613 LOMHZ-OSC
C613 2.2U-T35
C614 .01U
LOMHZ
27MHZ-OSC
U614
C615 2.2U-T35
C616 .01U
27MHZ
C670 C671 C672 C673 C675 0.1U
C650 C651 C652 C653 C654 C655 C656 C657 C658 C659 0.1U
C668 C669 0.1U
C661 C662 C663 0.1U
C630 C631 C632 C633 C634 C635 C636 C637 C638 C639 C640 C641 C642 C643 C644 C645 C646 C647 C648 C649 0.1U
U608 GAL20V8
U609 GAL22V10
U610 74F574
DSP D[0..23]
DSPCLK
10MHZ
R611 82
R610 82
ADCLK_DSP2
ADCLK_DSP1
TRGSYNC
CAR
ADCONV
ADCSYNC
ADCLK
SI[0..15]
SI[0..63]
30MHZ
30.208MHZ-OSC
U606 74F86
U607A U607B
C611 2.2U-T35
C612 .01U
U604 74HC574
U603 74HC574
U602 74HC245
U601 74HC573
N601 270X8P
N603A 100X3
SPARE LATCH
PD[0..23]
PA[0..23]
DSPRESET
DSPRESET#
-HEN1
-HEN2
-ATTEN1
-ATTEN2
-ATTEN3
-TRGP
DSPR/-W
-DSP_CS
-ADC_CS
-DAC_CS
-INT/EXT_TRG
-A/B_DAC
-SR_CLK
SR_DATA
-SR_LE
RISE/FALL
TRIGGER INDIC INT
PLATFORM INT
DAC_LE
PD7
PA7
PCS
PCS4
PCS5
PCS6
PCS7
HEADER2X2
U607D U607C
CUT TRACE FOR TWO CHANNEL USE
JP603
JP602 EDGE60
60 PIN EDGE CONNECTOR
ODD PINS ON COMP SIDE
PIN 1 TOWARDS REAR
POWER CONNECTOR
JP601 EDGE40
40 PIN EDGE CONNECTOR
ODD PINS ON COMP SIDE
PIN 1 TOWARDS REAR
PLATFORM CONNECTOR
ADDR[0..15]
ADDR[0..23]
ADDR[0..31]
ADDR[0..63]
ADDR[0..71]
ADDR[0..79]
ADDR[0..87]
ADDR[0..95]
ADDR[0..103]
ADDR[0..111]
ADDR[0..119]
ADDR[0..127]
ADDR[0..135]
ADDR[0..143]
ADDR[0..151]
ADDR[0..159]
ADDR[0..167]
ADDR[0..175]
ADDR[0..183]
ADDR[0..191]
ADDR[0..199]
ADDR[0..207]
ADDR[0..215]
ADDR[0..223]
ADDR[0..231]
ADDR[0..239]
ADDR[0..247]
ADDR[0..255]
ADDR[0..263]
ADDR[0..271]
ADDR[0..279]
ADDR[0..287]
ADDR[0..295]
ADDR[0..303]
ADDR[0..311]
ADDR[0..319]
ADDR[0..327]
ADDR[0..335]
ADDR[0..343]
ADDR[0..351]
ADDR[0..359]
ADDR[0..367]
ADDR[0..375]

J101
INPUT A

J102
INPUT B

K103A
K101B
K104A HS-212
C101 1U-MF
K102A
K103B
C102 1U-MF
K105A HS-212
HS-212

K106A HS-211
GROUNDING RELAY
R101 49.9-2W
SRC
CAL-INPUT

R102 965K 0.1%
R104 965K 0.1%
R103 31.6K 0.1%
R105 31.6K 0.1%
A_VIN
B_VIN

R107 475
R108 475

+15V_FE
R109 165
R110 499.0
C104 2.2U-T35
R111 499.0

Front-End Offset Adjust
P102 20K-10T
R112 90.9K
R113 10.0K
R114 1.58K
R115 1.58K
R116 10.0K
R117 1.000K

U101A U101B U100A U100B NPD5564
U104A OPA2604

R119 100K-1%
R120 10.0K
R121 1.58K
R122 1.58K
R123 10.0K
U104B OPA2604

U102A OPA37
TP101 TP
PRE_OUT

HIGH-GAIN CMRR ADJUST P101 20-20T
R118 110.0
R126 110.0
R125 10.0
R124 1.000K
R127 100K-1%
R128 100K-1%

K107A
HS-211
LOW-GAIN OFFSET ADJUST
P104 100K-10T
R106 75.0K
R138 909.0
P103 100-20T
R139 909.0
R140 10.0
R129 10.0
R137 100K-1%
C106 6.8P
TP102 TP
TP103 TP
U103A OP27
C107 .1U
R131 49.9K
R130 1K
R132 10K
D101 1N5241 11V
-15V_FE

D106 1N4148
-ATTEN
Q105 2N3904
K105C HS-212

D103 1N4148
D102 1N4148
-A/SRC_INP
B_INP
Q102 2N3904
Q101 2N3904
K102C HS-212
K101C HS-212

D105 1N4148
D104 1N4148
CAL
-DC/AC
Q104 2N3904
Q103 2N3904
K104C HS-212
K103C HS-212

D107 1N4148
D108 1N4148
-HI/LO_GAIN
-FLOAT/GND
Q106 2N3904
Q107 2N3904
K106B HS-211
K107B HS-211

R141 10.0K
R142 1.37K
R143 1.37K
R144 10.0K
+HIV_REF +1.80V
-HIV_REF -1.80V

WILL DETECT HI VOLTAGE WHEN INPUT IS GREATER THAN 57 VOLTS PEAK AND ACTIVATE -30dB ATTENUATOR

U105A LF347
U105B LF347
U105C LF347
U105D LF347
D109 1N4148
D110 1N4148
D111 1N4148
D112 1N4148
R146 43K
R147 15K
C118 0.1U

C112 2.2U-T35
C113 2.2U-T35
U104C OPA2604
R133 10
C108 10U-T35
U103B OP27
C109 10U-T35
R134 10
R148 100
C103 .1U
U105E LF347
C105 .1U
R149 100
R135 10
C110 10U-T35
U102B OPA37
C111 10U-T35
R136 10

C121
D101
J102
K104
P104
Q104
R142
U109

Stanford Research Systems		
Title: PREAMPLIFIER		
Size: C	Document Number: ADFFT1	REV: C

GAIN STAGES

Title

Size C | Document Number ADFF12 | REV C

+5V VCC

PRE OUT

+/- 10V MAX

GAIN OUT

+/- 1V MAX

+/- 5V MAX

0 dB

-8 dB

-60dB

-40DB

-60DB

-60DB

-6DB

-GAIN C

GAIN SETTING: C B A GAIN

000 14 dB
001 20 dB
010 34 dB
011 40 dB
100 54 dB
101 60 dB
111 60 dB

GAIN=10

GAIN=5

OVERLOAD DETECT AT +/- 800 mV

OVLD

TP205 TP

U211 LM393

R216 10.0K

R217 576

R218 576

R219 10.0K

C202 0.1U

U210A NE5534

U207A NE5532

U207B NE5532

U208A DG444

U208B 205

R208 162

U209A DG444

R209 137

R210 102

R211 82.5

R212 64.9

R213 243

R214 243

U212 74HC138

U213A 74HC32

U213B 74HC32

U213C 74HC32

U213D 74HC32

U202A 74HC04

U202B 74HC04

U202C 74HC04

U202D 74HC04

U202E 74HC04

U203A OPA37

U204A DG444

U204B DG444

R203 8.06K

R204 1.00K

R205 1.00K

R206 9.09K

R207 1.00K

U205A OPA37

U206A DG444

TP201 TP

TP202 TP

TP203 TP

TP204 TP

TP206 TP

U206B DG444

U206C DG444

U206D DG444

U206E DG444

R256 100

R259 100

R260 100

R261 100

R262 100

R263 100

R264 100

R265 10

R266 10

R269 10

R270 10

R271 10

R272 10

R273 10

R253 100

R251 100

R252 100

R250 100

R201 6.04K

R202 4.02K

U207C NE5532

U207D NE5532

U207E NE5532

U208E DG444

U208F DG444

U209B DG444

U209C DG444

U209D DG444

U209E DG444

U209F DG444

U210B NE5534

U210C NE5534

U210D NE5534

U210E NE5534

U210F NE5534

U211A LM393

U211B LM393

U212A 74HC138

U212B 74HC138

U212C 74HC138

U212D 74HC138

U212E 74HC138

U212F 74HC138

U212G 74HC138

U212H 74HC138

U213E 74HC32

U213F 74HC32

U213G 74HC32

U213H 74HC32

U214A 74HC04

U214B 74HC04

U214C 74HC04

U214D 74HC04

U214E 74HC04

U214F 74HC04

U214G 74HC04

U214H 74HC04

U215A OPA37

U215B OPA37

U215C OPA37

U215D OPA37

U215E OPA37

U215F OPA37

U215G OPA37

U215H OPA37

U216A DG444

U216B DG444

U216C DG444

U216D DG444

U216E DG444

U216F DG444

U216G DG444

U216H DG444

U217A DG444

U217B DG444

U217C DG444

U217D DG444

U217E DG444

U217F DG444

U217G DG444

U217H DG444

U218A DG444

U218B DG444

U218C DG444

U218D DG444

U218E DG444

U218F DG444

U218G DG444

U218H DG444

U219A DG444

U219B DG444

U219C DG444

U219D DG444

U219E DG444

U219F DG444

U219G DG444

U219H DG444

U220A DG444

U220B DG444

U220C DG444

U220D DG444

U220E DG444

U220F DG444

U220G DG444

U220H DG444

U221A DG444

U221B DG444

U221C DG444

U221D DG444

U221E DG444

U221F DG444

U221G DG444

U221H DG444

U222A DG444

U222B DG444

U222C DG444

U222D DG444

U222E DG444

U222F DG444

U222G DG444

U222H DG444

U223A DG444

U223B DG444

U223C DG444

U223D DG444

U223E DG444

U223F DG444

U223G DG444

U223H DG444

U224A DG444

U224B DG444

U224C DG444

U224D DG444

U224E DG444

U224F DG444

U224G DG444

U224H DG444

U225A DG444

U225B DG444

U225C DG444

U225D DG444

U225E DG444

U225F DG444

U225G DG444

U225H DG444

U226A DG444

U226B DG444

U226C DG444

U226D DG444

U226E DG444

U226F DG444

U226G DG444

U226H DG444

U227A DG444

U227B DG444

U227C DG444

U227D DG444

U227E DG444

U227F DG444

U227G DG444

U227H DG444

U228A DG444

U228B DG444

U228C DG444

U228D DG444

U228E DG444

U228F DG444

U228G DG444

U228H DG444

U229A DG444

U229B DG444

U229C DG444

U229D DG444

U229E DG444

U229F DG444

U229G DG444

U229H DG444

U230A DG444

U230B DG444

U230C DG444

U230D DG444

U230E DG444

U230F DG444

U230G DG444

U230H DG444

U231A DG444

U231B DG444

U231C DG444

U231D DG444

U231E DG444

U231F DG444

U231G DG444

U231H DG444

U232A DG444

U232B DG444

U232C DG444

U232D DG444

U232E DG444

U232F DG444

U232G DG444

U232H DG444

U233A DG444

U233B DG444

U233C DG444

U233D DG444

U233E DG444

U233F DG444

U233G DG444

U233H DG444

U234A DG444

U234B DG444

U234C DG444

U234D DG444

U234E DG444

U234F DG444

U234G DG444

U234H DG444

U235A DG444

U235B DG444

U235C DG444

U235D DG444

U235E DG444

U235F DG444

U235G DG444

U235H DG444

U236A DG444

U236B DG444

U236C DG444

U236D DG444

U236E DG444

U236F DG444

U236G DG444

U236H DG444

U237A DG444

U237B DG444

U237C DG444

U237D DG444

U237E DG444

U237F DG444

U237G DG444

U237H DG444

U238A DG444

U238B DG444

U238C DG444

U238D DG444

U238E DG444

U238F DG444

U238G DG444

U238H DG444

U239A DG444

U239B DG444

U239C DG444

U239D DG444

U239E DG444

U239F DG444

U239G DG444

U239H DG444

U240A DG444

U240B DG444

U240C DG444

U240D DG444

U240E DG444

U240F DG444

U240G DG444

U240H DG444

U241A DG444

U241B DG444

U241C DG444

U241D DG444

U241E DG444

U241F DG444

U241G DG444

U241H DG444

U242A DG444

U242B DG444

U242C DG444

U242D DG444

U242E DG444

U242F DG444

U242G DG444

U242H DG444

U243A DG444

U243B DG444

U243C DG444

U243D DG444

U243E DG444

U243F DG444

U243G DG444

U243H DG444

U244A DG444

U244B DG444

U244C DG444

U244D DG444

U244E DG444

U244F DG444

U244G DG444

U244H DG444

U245A DG444

U245B DG444

U245C DG444

U245D DG444

U245E DG444

U245F DG444

U245G DG444

U245H DG444

U246A DG444

U246B DG444

U246C DG444

U246D DG444

U246E DG444

U246F DG444

U246G DG444

U246H DG444

U247A DG444

U247B DG444

U247C DG444

U247D DG444

U247E DG444

U247F DG444

U247G DG444

U247H DG444

U248A DG444

U248B DG444

U248C DG444

U248D DG444

U248E DG444

U248F DG444

U248G DG444

U248H DG444

U249A DG444

U249B DG444

U249C DG444

U249D DG444

U249E DG444

U249F DG444

U249G DG444

U249H DG444

U250A DG444

U250B DG444

U250C DG444

U250D DG444

U250E DG444

U250F DG444

U250G DG444

U250H DG444

U251A DG444

U251B DG444

U251C DG444

U251D DG444

U251E DG444

U251F DG444

U251G DG444

U251H DG444

U252A DG444

U252B DG444

U252C DG444

U252D DG444

U252E DG444

U252F DG444

U252G DG444

U252H DG444

U253A DG444

U253B DG444

U253C DG444

U253D DG444

U253E DG444

U253F DG444

U253G DG444

U253H DG444

U254A DG444

U254B DG444

U254C DG444

U254D DG444

U254E DG444

U254F DG444

U254G DG444

U254H DG444

U255A DG444

U255B DG444

U255C DG444

U255D DG444

U255E DG444

U255F DG444

U255G DG444

U255H DG444

U256A DG444

U256B DG444

U256C DG444

U256D DG444

U256E DG444

U256F DG444

U256G DG444

U256H DG444

U257A DG444

U257B DG444

U257C DG444

U257D DG444

U257E DG444

U257F DG444

U257G DG444

U257H DG444

U258A DG444

U258B DG444

U258C DG444

U258D DG444

U258E DG444

U258F DG444

U258G DG444

U258H DG444

U259A DG444

U259B DG444

U259C DG444

U259D DG444

U259E DG444

U259F DG444

U259G DG444

U259H DG444

U260A DG444

U260B DG444

U260C DG444

U260D DG444

U260E DG444

U260F DG444

U260G DG444

U260H DG444

U261A DG444

U261B DG444

U261C DG444

U261D DG444

U261E DG444

U261F DG444

U261G DG444

U261H DG444

U262A DG444

U262B DG444

U262C DG444

U262D DG444

U262E DG444

U262F DG444

U262G DG444

U262H DG444

U263A DG444

U263B DG444

U263C DG444

U263D DG444

U263E DG444

U263F DG444

U263G DG444

U263H DG444

U264A DG444

U264B DG444

U264C DG444

U264D DG444

U264E DG444

U264F DG444

U264G DG444

U264H DG444

U265A DG444

U265B DG444

U265C DG444

U265D DG444

U265E DG444

U265F DG444

U265G DG444

U265H DG444

U266A DG444

U266B DG444

U266C DG444

U266D DG444

U266E DG444

U266F DG444

U266G DG444

U266H DG444

U267A DG444

U267B DG444

U267C DG444

U267D DG444

U267E DG444

U267F DG444

U267G DG444

U267H DG444

U268A DG444

U268B DG444

U268C DG444

U268D DG444

U268E DG444

U268F DG444

U268G DG444

U268H DG444

U269A DG444

U269B DG444

U269C DG444

U269D DG444

U269E DG444

U269F DG444

U269G DG444

U269H DG444

U270A DG444

U270B DG444

U270C DG444

U270D DG444

U270E DG444

U270F DG444

U270G DG444

U270H DG444

U271A DG444

U271B DG444

U271C DG444

U271D DG444

U271E DG444

U271F DG444

U271G DG444

U271H DG444

U272A DG444

U272B DG444

U272C DG444

U272D DG444

U272E DG444

U272F DG444

U272G DG444

U272H DG444

U273A DG444

U273B DG444

U273C DG444

U273D DG444

U273E DG444

U273F DG444

U273G DG444

U273H DG444

U274A DG444

U274B DG444

U274C DG444

U274D DG444

U274E DG444

U274F DG444

U274G DG444

U274H DG444

U275A DG444

U275B DG444

U275C DG444

U275D DG444

U275E DG444

U275F DG444

U275G DG444

U275H DG444

U276A DG444

U276B DG444

U276C DG444

U276D DG444

U276E DG444

U276F DG444

U276G DG444

U276H DG444

U277A DG444

U277B DG444

U277C DG444

U277D DG444

U277E DG444

U277F DG444

U277G DG444

U277H DG444

U278A DG444

U278B DG444

U278C DG444

U278D DG444

U278E DG444

U278F DG444

U278G DG444

U278H DG444

U279A DG444

U279B DG444

U279C DG444

U279D DG444

U279E DG444

U279F DG444

U279G DG444

U279H DG444

U280A DG444

U280B DG444

U280C DG444

U280D DG444

U280E DG444

U280F DG444

U280G DG444

U280H DG444

U281A DG444

U281B DG444

U281C DG444

U281D DG444

U281E DG444

U281F DG444

U281G DG444

U281H DG444

U282A DG444

U282B DG444

U282C DG444

U282D DG444

U282E DG444

U282F DG444

U282G DG444

U282H DG444

U283A DG444

U283B DG444

U283C DG444

U283D DG444

U283E DG444

U283F DG444

U283G DG444

U283H DG444

U284A DG444

U284B DG444

U284C DG444

U284D DG444

U284E DG444

U284F DG444

U284G DG444

U284H DG444

U285A DG444

U285B DG444

U285C DG444

U285D DG444

U285E DG444

U285F DG444

U285G DG444

U285H DG444

U286A DG444

U286B DG444

U286C DG444

U286D DG444

U286E DG444

U286F DG444

U286G DG444

U286H DG444

U287A DG444

U287B DG444

U287C DG444

U287D DG444

U287E DG444

U287F DG444

U287G DG444

U287H DG444

U288A DG444

U288B DG444

U288C DG444

U288D DG444

U288E DG444

U288F DG444

U288G DG444

U288H DG444

U289A DG444

U289B DG444

U289C DG444

U289D DG444

U289E DG444

U289F DG444

U289G DG444

U289H DG444

U290A DG444

U290B DG444

U290C DG444

U290D DG444

U290E DG444

U290F DG444

U290G DG444

U290H DG444

U291A DG444

U291B DG444

U291C DG444

U291D DG444

U291E DG444

U291F DG444

U291G DG444

U291H DG444

U292A DG444

U292B DG444

U292C DG444

U292D DG444

U292E DG444

U292F DG444

U292G DG444

U292H DG444

U293A DG444

U293B DG444

U293C DG444

U293D DG444

U293E DG444

U293F DG444

U293G DG444

U293H DG444

U294A DG444

U294B DG444

U294C DG444

U294D DG444

U294E DG444

U294F DG444

U294G DG444

U294H DG444

U295A DG444

U295B DG444

U295C DG444

U295D DG444

U295E DG444

U295F DG444

U295G DG444

U295H DG444

U296A DG444

U296B DG444

U296C DG444

U296D DG444

U296E DG444

U296F DG444

U296G DG444

U296H DG444

U297A DG444

U297B DG444

U297C DG444

U297D DG444

U297E DG444

U297F DG444

U297G DG444

U297H DG444

U298A DG444

U298B DG444

U298C DG444

U298D DG444

U298E DG444

U298F DG444

U298G DG444

U298H DG444

U299A DG444

U299B DG444

U299C DG444

U299D DG444

U299E DG444

U299F DG444

U299G DG444

U299H DG444

U300A DG444

U300B DG444

U300C DG444

U300D DG444

U300E DG444

U300F DG444

U300G DG444

U300H DG444

U301A DG444

U301B DG444

U301C DG444

U301D DG444

U301E DG444

U301F DG444

U301G DG444

U301H DG444

U302A DG444

U302B DG444

U302C DG444

U302D DG444

U302E DG444

U302F DG444

U302G DG444

U302H DG444

U303A DG444

U303B DG444

U303C DG444

U303D DG444

U303E DG444

U303F DG444

U303G DG444

U303H DG444

U304A DG444

U304B DG444

U304C DG444

U304D DG444

U304E DG444

U304F DG444

U304G DG444

U304H DG444

U305A DG444

U305B DG444

U305C DG444

U305D DG444

U305E DG444

U305F DG444

U305G DG444

U305H DG444

U306A DG444

U306B DG444

U306C DG444

U306D DG444

U306E DG444

U306F DG444

U306G DG444

U306H DG444

U307A DG444

U307B DG444

U307C DG444

U307D DG444

U307E DG444

U307F DG444

U307G DG444

U307H DG444

U308A DG444

U308B DG444

U308C DG444

U308D DG444

U308E DG444

U308F DG444

U308G DG444

U308H DG444

U309A DG444

U309B DG444

U309C DG444

U309D DG444

U309E DG444

U309F DG444

U309G DG444

U309H DG444

U310A DG444

U310B DG444

U310C DG444

U310D DG444

U310E DG444

U310F DG444

U310G DG444

U310H DG444

U311A DG444

U311B DG444

U311C DG444

U311D DG444

U311E DG444

U311F DG444

U311G DG444

U311H DG444

U312A DG444

U312B DG444

U312C DG444

U312D DG444

U312E DG444

U312F DG444

U312G DG444

U312H DG444

U313A DG444

U313B DG444

U313C DG444

U313D DG444

U313E DG444

U313F DG444

U313G DG444

U313H DG444

U314A DG444

U314B DG444

U314C DG444

U314D DG444

U314E DG444

U314F DG444

U314G DG444

U314H DG444

U315A DG444

U315B DG444

U315C DG444

U315D DG444

U315E DG444

U315F DG444

U315G DG444

U315H DG444

U316A DG444

U316B DG444

U316C DG444

U316D DG444

U316E DG444

U316F DG444

U316G DG444

U316H DG444

U317A DG444

U317B DG444

U317C DG444

U317D DG444

U317E DG444

U317F DG444

U317G DG444

U317H DG444

U318A DG444

U318B DG444

U318C DG444

U318D DG444

U318E DG444

U318F DG444

U318G DG444

U318H DG444

U319A DG444

U319B DG444

U319C DG444

U319D DG444

U319E DG444

U319F DG444

U319G DG444

U319H DG444

U320A DG444

U320B DG444

U320C DG444

U320D DG444

U320E DG444

U320F DG444

U320G DG444

U320H DG444

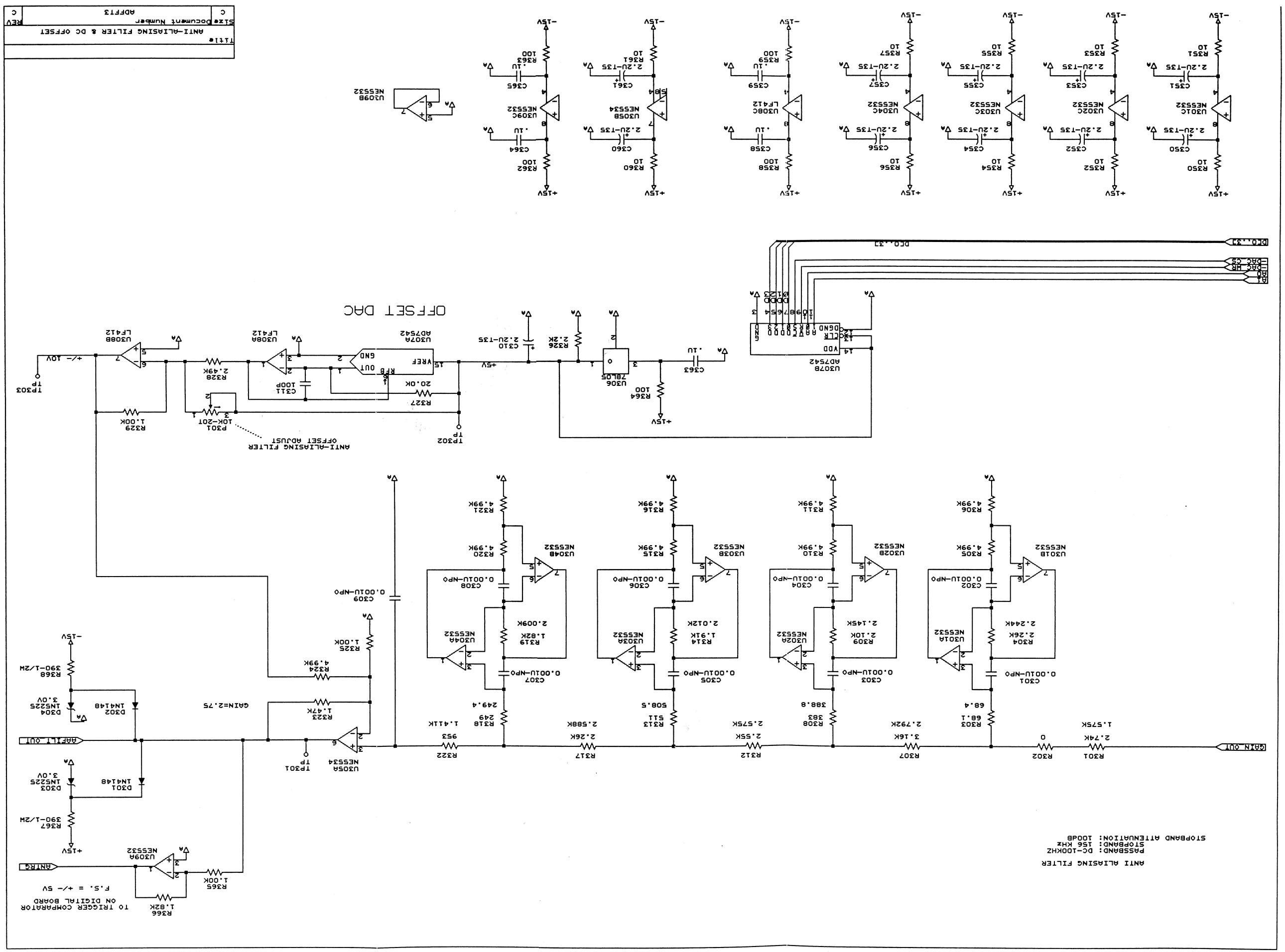

Title
ANTI-ALIASING FILTER & DC OFFSET
Size
Document Number
ADFFT3
REV
C
OFFSET DAC
ANTI-ALIASING FILTER
OFFSET ADJUST
GAIN=2.75
AAFILT OUT
ANTRG
GAIN OUT
TO TRIGGER COMPARATOR
ON DIGITAL BOARD
F.S. = +/- 5V
ANTI ALIASING FILTER
PASSBAND: DC-100KHZ
STOPBAND: 156 KHZ
STOPBAND ATTENUATION: 100dB

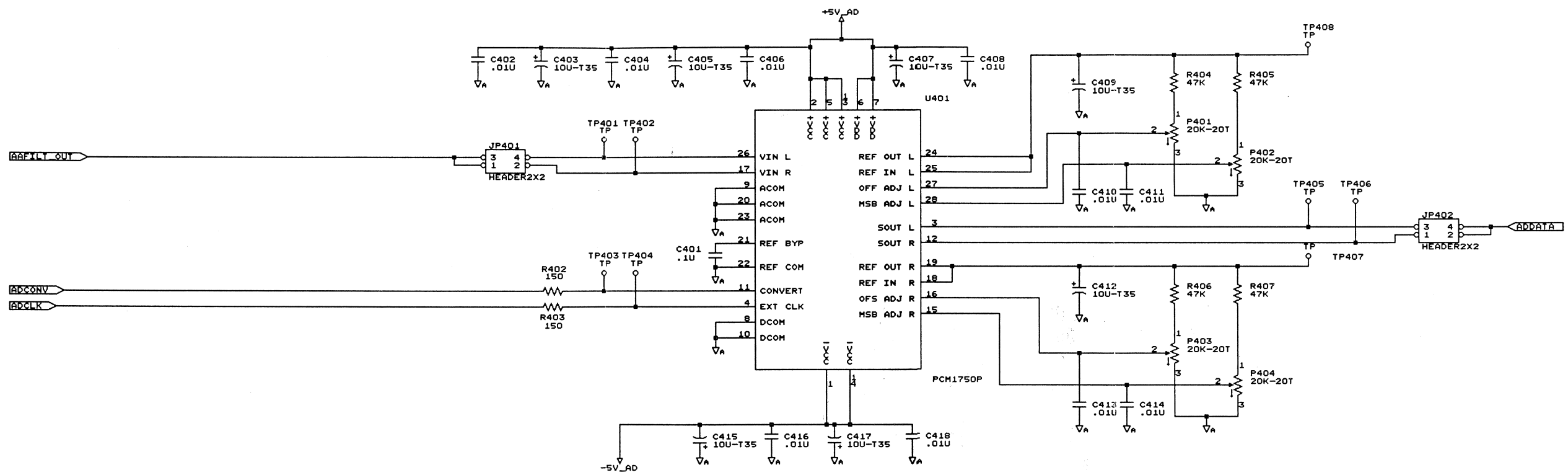

Stanford Research Systems		
Title	A/D CONVERTER	
Size C	Document Number ADFFT4	REV C

POWER CONNECTOR

60 PIN EDGE CONNECTOR
ODD PINS ON COMP SIDE
PIN 1 TOWARDS REAR

JP501
EDGE60

PLATFORM CONNECTOR

40 PIN EDGE CONNECTOR
ODD PINS ON COMP SIDE
PIN 1 TOWARDS REAR

JP502
EDGE40

BOARD ADDRESS

JP503
HEADER4X2

U501A 74HC74
U501B 74HC74
N501A 100X4
N501B 100X4
N501C 100X4
N501D 100X4
N502A 100X4
N502B 100X4
N502C 100X4
N502D 100X4
R511 15K
R512 5.1K
T504 T1-1
TP501 TP
TP502 TP
TP503 TP
TP504
TP505
TP506 TP
TP507 TP
TP508 TP
C538 10U-T35
C539 10U-T35
L501 BEAD3
C503 2.2U-T35
U507A 74HC14
U507B 74HC14
U508E 74HC14
U508F 74HC14
U504 74HC595
U505 74HC595
U506 74HC595
300X8D
Q501 2N3904

BYPASS CAPACITORS

C534 0.1U
C535 0.1U
C536 0.1U
C537 0.1U

U509 7815
U510 7915
U511 LM317L
U512 LM337L
R505 10-1/2W
R506 10-1/2W
R507 10-1/2W
R508 10-1/2W
C509 1000U-E25
C510 1000U-E25
C511 .1U
C512 .1U
C513 2.2U-T35
C514 2.2U-T35
C515 470U-E25
C516 .1U
C517 470U-E25
C518 .1U
C519 2.2U-T35
C520 2.2U-T35
R501 249
R502 2.80K
R503 2.80K
R504 249
TP511 TP
TP512 TP
TP513 TP
TP514 TP

U202F 74HC04
U204C DG444
U204D DG444

UNUSED PARTS

U513 78L05
U514 78L12
U515 78L05
U516 79L12
U517 79L05
U518 7805
U519 7812
R509 47-1/2W
R510 47-1/2W
C521 470U-E25
C522 .1U
C523 470U-E25
C524 .1U
C525 .1U
C526 .1U
C527 2.2U-T35
C528 2.2U-T35
C529 2.2U-T35
C530 .1U
C531 2.2U-T35
C533 .1U
TP515 TP
TP516 TP
TP517 TP
TP518 TP
TP519 TP
TP520 TP
TP521 TP

Title	DIGITAL INTERFACE	
Size C	Document Number ADFFT5	REV C