REVISIONS			
REV	DESCRIPTION	DATE	APPROVED
C	REDESIGNED FOR USE WITH LDC	2/3/10	GAW
D	ADDED HOLES FOR CTC100 FAN EXHAUST	6/2/11	GAW
E	CHANGED GROMMET P/N	6/8/16	GAW
F	CHANGED TO POWDER COAT AND CHANGED GROMMET P/N	8/15/18	GAW

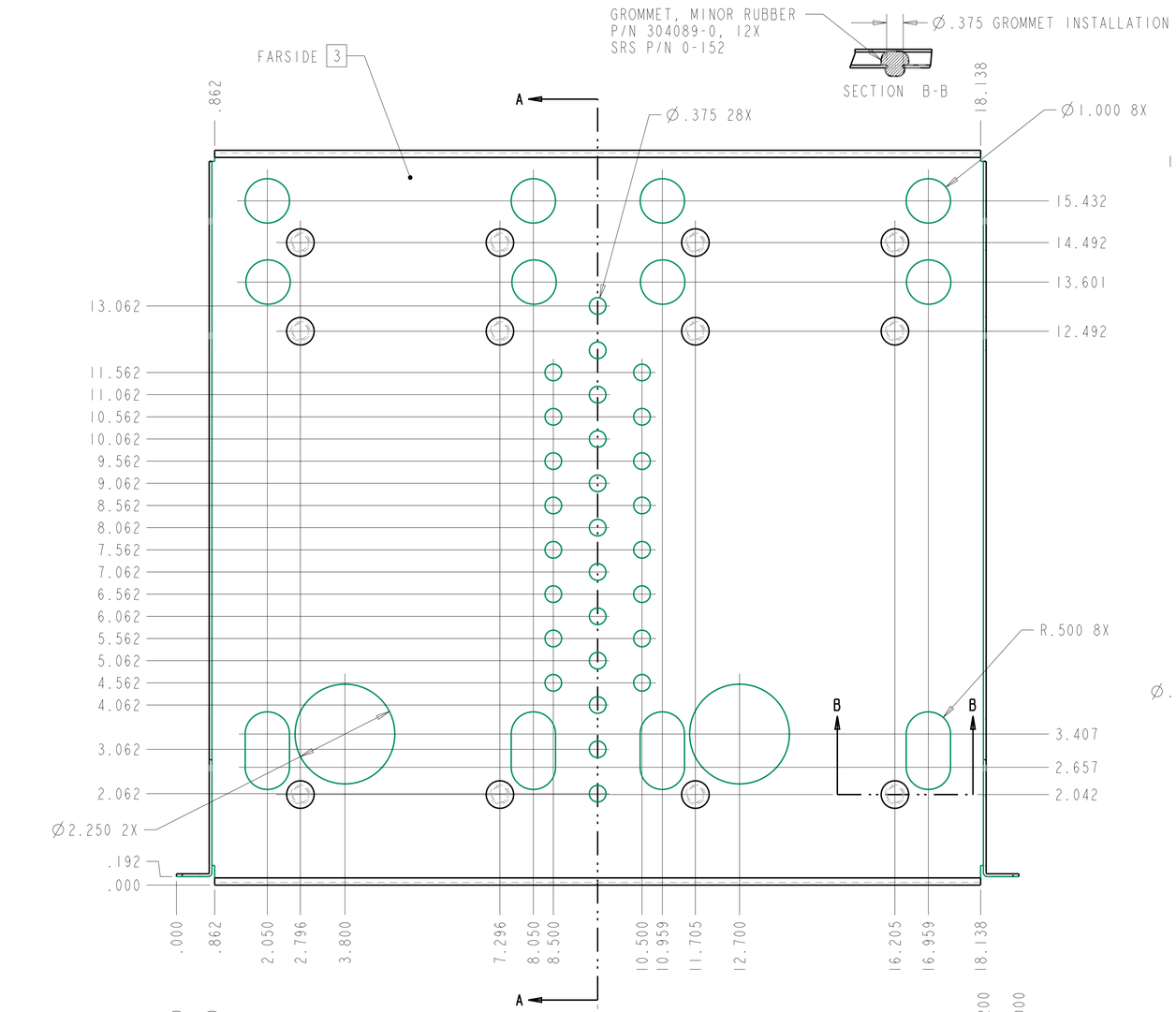

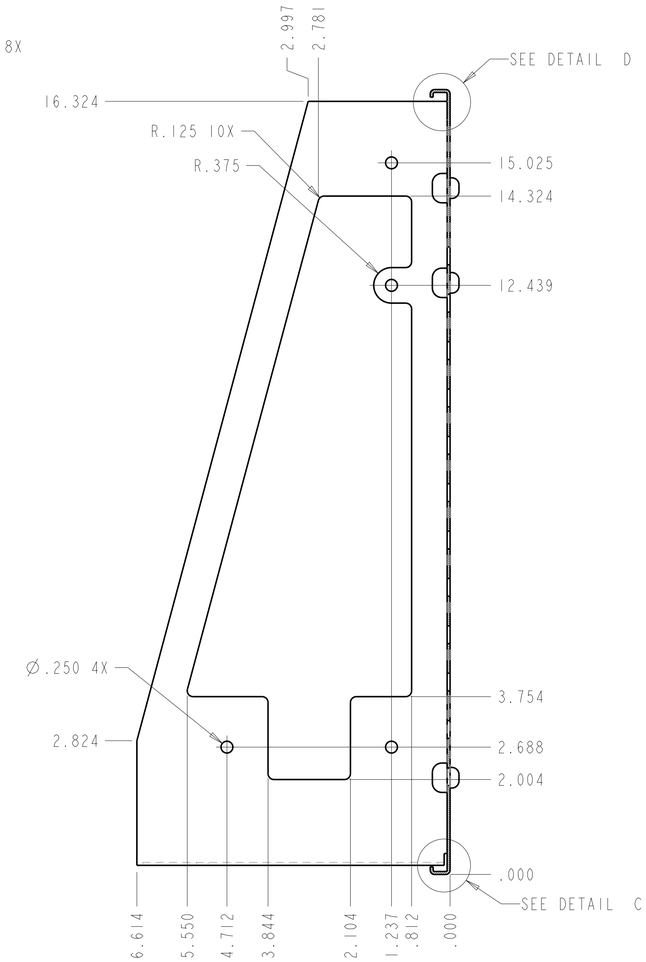

SECTION A-A
TYPICAL BOTH SIDES

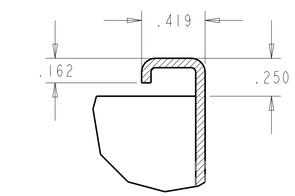

DETAIL D
SCALE 2.000

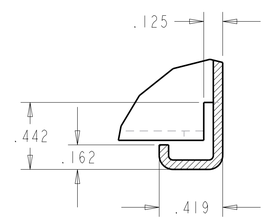

DETAIL C
SCALE 2.000

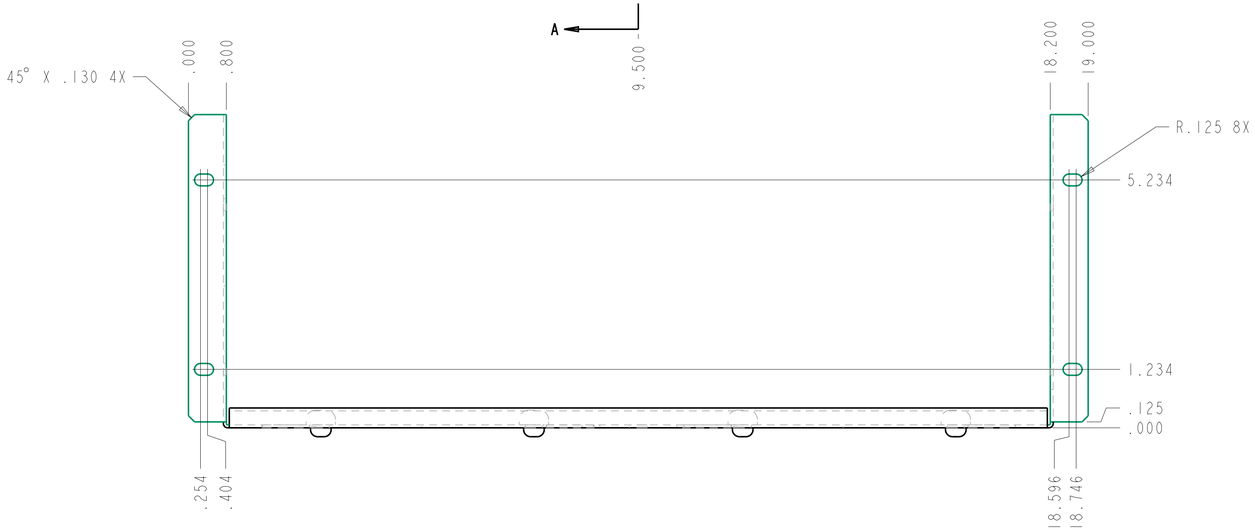

NOTES: UNLESS OTHERWISE SPECIFIED

1. MATERIAL: 16 GA. CRS, (.059 THICK).
2. FINISH: POWDER COAT ENTIRE PART BLACK, CARDINAL #C241-BK303, LIGHT TEXTURE.
3. PART MARKING: VENDOR ID, MONTH/YEAR OF MANUFACTURE, PART NUMBER, AND CURRENT REVISION LEVEL USING METAL AND/OR RUBBER STAMP, APPROXIMATELY WHERE SHOWN.
4. REMOVE ALL BURRS AND SHARP EDGES.
5. BEND RADII SHALL BE .03 MAX.

MATERIAL: 1	UNLESS OTHERWISE SPECIFIED, DIMENSIONS ARE IN INCHES.	STANFORD RESEARCH SYSTEMS, INC. 1290-D Reamwood Avenue, Sunnyvale CA 94089	
FINISH: 2	TOLERENCES: .X ± .XX ± .XXX ± .010 ANGLE ±	DRAWING TITLE: DUAL RACK MOUNT SHELF, IGC/LDC/CTC	
	ENG BY/DATE G.WATERS	SIZE D / PRO/E FILENAME:	SRS PART NO. 7-01286-720 / REV F
DO NOT SCALE DRAWING	DWN BY/DATE G.WATERS 27-Jan-10	SCALE:0.63	SHEET: 1 OF 1

NEXT ASSY	USED ON